Island City Development

Fax: (510)-522-7848

TTY/TRS: 711

701 Atlantic Avenue | Alameda, CA 94501

1628 Webster Street
Addendum 3 – Permit Drawings and Bid Clarifications

The attached drawings are being reviewed by the City of Alameda for building permits as of July 27, 2023.

In addition to the addendum 2 narrative, the following clarifications are requested in your bid response.

Clarifications

1. The building's Meeting Room can be used for GC construction offices, with use of common area restrooms, and limited storage during construction. The portion of the parking lot designated for the parklet can be used for additional staging. The exit door at the south end of the building is the preferred access point for tenant improvement work.

2. The project can be phased by each floor to facilitate an occupied rehab OR the entire building can be one phase. Please clarify your expectations for price and schedule based on either scenario. ICD is interested in the most cost effective approach.

3. Break out the Spa demolition and reconstruction as a separate line scope of work from the residential unit work. This is being reevaluated as a potential future project.

4. No trenching or ground disturbance is expected for this project, except to fasten the new bicycle racks and the long term bicycle parking cage to the asphalt.

5. There will be a "Door King" or alternative product at the main entrance (parking lot side) that is key fob activated. Each unit door will be keyed in place of the existing card reader entry system.

6. Interior wall modifications do not trigger a 1-hr rating requirement for the new walls. Bathroom walls within the unit are not required to be rated. The 1-hr rating of the ceilings and floors need to be maintained.

7. LVT in units should be broken out as a SF cost per unit. Approximately 144 SF of LVT is anticipated per unit.

8. Any areas for carpet replacement also require carpet base replacement with rubber base.

9. Existing unit sink and faucet are to be salvaged and reused.

10. Despite the permit drawings, the new kitchenette should be priced with a recirculating hood rather than a fully vented system. This is a significant change to the bid set.

11. Long term bicycle storage facility is a fully enclosed chain link cage.

12. The dog run has been deleted.

13. Any fire alarm modifications will be handled as a deferred submittal. The expectation is that only the office area is affected.

14. There is a separate RFP for Roof Placement and Solar. Should your firm be interested in this work, you can add the costs and assumptions from that RFP in your bid response for the tenant improvement work.

Add/Alternates

A. Upper cabinets in kitchenettes.

B. Demolition of existing laundry chute, per sheet note 9.

C. Removal of unit headboard units (including attached nightstands), plus associated patching and painting work.

D. Message board (approx. 8.5x11) at exterior of each unit.

E. For kitchen hood venting, per stack price to include a stacked vent system, per permit drawings. Unit price for 3 floors stacked and for 2 floors stacked.

F. LVT flooring in corridors will be required on ground floor, but is an add/alternate for the 2nd and 3rd floors.

G. Exterior re-painting of entire building.

H. Additional labor to move/remove furnishings prior to commencing work.

GARAVAGLIA ARCHITECTURE INC.
582 MARKET STREET
SUITE 1800
SAN FRANCISCO, CA 94104
T: 415.391.9633
F: 415.391.9647

www.garavaglia.com

1628 WEBSTER STREET
ALAMEDA, CALIFORNIA

CONVERSION TO
AFFORDABLE HOUSING

POPPY PLACE

LOCATION MAP

ADDRESS: ADDRESS
CITY, STATE ZIP

PROJECT LOCATION

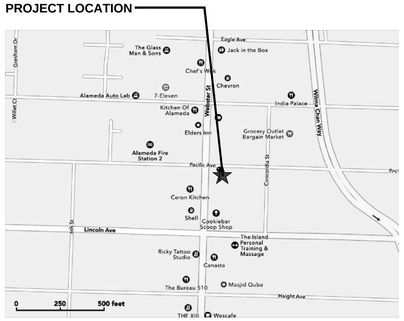

N

PROJECT INFORMATION

ADDRESS: 1628 WEBSTER STREET
ALAMEDA, CA 94501

APN: 073-0418-001-02
073-0418-002-01
073-0418-003
073-0418-004

LEGAL DESCRIPTION: LOTS 1, 2, 3, 4, 5, 7, 8, 9, & 10

ZONING: C-C COMMUNITY COMMERCIAL

DESCRIPTION: TENANT IMPROVEMENTS TO CONVERT AN EXISTING TOURIST HOTEL FOR USE AS AFFORDABLE HOUSING FOR LOW-INCOME HOUSEHOLDS. SCOPE WILL INCLUDE: ADDING KITCHENETTES TO EACH EXISTING RESIDENTIAL UNIT AND UPGRADING 3 UNITS FOR ACCESSIBILITY; EXISTING COMMERCIAL LAUNDRY SPACE WILL BE CONVERTED FOR LAUNDRY USE BY RESIDENTS; INDIVIDUAL MAILBOXES WILL BE PROVIDED IN LOBBY AREA; MANAGEMENT AND ADMINISTRATIVE OFFICE SPACE WILL OCCUPY RECONFIGURED EXISTING HOTEL SERVICE SPACES; SHORT TERM AND LONG TERM BICYCLE PARKING WILL BE PROVIDED IN THE EXISTING PARKING LOT; A PARKLET ALONG WITH A DOG AREA, & ADDITIONAL COMMON EXTERIOR OPEN SPACE WILL OCCUPY A PORTION OF THE EXISTING PARKING LOT.

PROJECT AREA: NET LOT AREA: 29,951 SF
EXISTING BUILDING FOOTPRINT: 10,368 SF
PROPOSED BUILDING FOOTPRINT: NO CHANGE

GROSS FLOOR AREA (SF)

	EXISTING (NO CHANGE)
FIRST	10,368 SF
SECOND	10,780 SF
THIRD	10,780 SF
TOTAL	31,928 SF

OCCUPANT LOADS:

	AREA (SF)	LOAD FACTOR	# OCC
FIRST (B)	4,832	100	49
FIRST (R-2)	4,972	200	25
FIRST (A-3)	564	15	38
SECOND (R-2)	10,780	200	54
THIRD (R-2)	10,780	200	54
TOTAL	31,928		220

CODE INFORMATION

BUILDING CODE: 2022 CALIFORNIA BUILDING CODE
2022 CALIFORNIA PLUMBING CODE
2022 CALIFORNIA MECHANICAL CODE
2022 CALIFORNIA ELECTRICAL CODE
2022 CALIFORNIA ENERGY EFFICIENCY STANDARDS

OCCUPANCY: EXISTING R-1, TOURIST HOTEL
PROPOSED R-2, APARTMENTS

CONSTRUCTION TYPE: V-A

MEANS OF EGRESS: EXISTING 3 STORY BUILDING WITH 2 EXITS PER FLOOR
2 EXITS REQUIRED
2 EXITS PROVIDED

FIRE PROTECTION: BUILDING IS ALREADY FULLY SPRINKLERED FOR EXISTING OCCUPANCY

DEFERRED SUBMITTALS: SPRINKLER AND FIRE ALARM PERMITS FOR NECESSARY MINOR ADJUSTMENTS FOR PROPOSED SCOPE OF WORK.

PROJECT DIRECTORY

OWNER: ISLAND CITY DEVELOPMENT
701 ATLANTIC AVENUE
ALAMEDA, CA 94501
CONTACT: SYLVIA MARTINEZ
TEL: 510.747.4343
EML: smartinez@alamedahsg.org

ARCHITECT: MICHAEL GARAVAGLIA, AIA
GARAVAGLIA ARCHITECTURE, INC.
582 MARKET STREET SUITE 1800
SAN FRANCISCO, CA 94104
CONTACT: AMBROSE WONG
TEL: 415-391-9633
FAX: 415-391-9647
EML: ambrose@garavaglia.com

STRUCTURAL ENGINEER:
DUQUETTE ENGINEERING
4340 STEVENS CREEK BLVD. SUITE 200
SAN JOSE, CA 95129
CONTACT: STEVE DUQUETTE
TEL: 408-615-9200
FAX: 408-615-9900
EML: spd@duquette-eng.com

MEP ENGINEER:
EDESIGNC INC.
582 MARKET STREET, SUITE 400
SAN FRANCISCO, CA 94104
CONTACT: ROSANNA LERMA, PE
TEL: 415.963.4303EXT. 100
FAX: 415.963.4341
EML: rosanna@edesignc.com

DRAWING INDEX

ARCHITECTURAL:
A-0.00 COVER SHEET
A-0.01 GENERAL NOTES
A-1.01 SITE PLAN - PROPOSED
A-2.01 FIRST FLOOR PLAN- EXISTING/DEMO
A-2.02 SECOND FLOOR PLAN- EXISTING/DEMO
A-2.03 THIRD FLOOR PLAN- EXISTING/DEMO
A-2.11 FIRST FLOOR PLAN - PROPOSED
A-2.12 SECOND FLOOR PLAN - PROPOSED
A-2.13 SECOND FLOOR PLAN - PROPOSED
A-3.01 EXTERIOR ELEVATION - EXISTING/DEMO
A-4.11 ENLARGED PLAN
A-5.11 INTERIOR ELEVATIONS
A-9.01 ACCESSIBILITY DETAILS
A-9.02 INTERIOR DETAILS

MECHANICAL:
M-0.00 MECHANICAL TITLE SHEET
M-2.11 MAIN FLOOR PLAN MECHANICAL PROPOSED
M-2.12 SECOND FLOOR PLAN MECHANICAL PROPOSED
M-2.13 THIRD FLOOR PLAN MECHANICAL PROPOSED
M-2.14 MECHANICAL ROOF PLAN PROPOSED
M-9.00 MECHANICAL DETAIL SHEET

PLUMBING:
P-0.00 PLUMBING TITLE SHEET
P-2.01 MAIN FLOOR PLAN PLUMBING DEMOLITION
P-2.11 MAIN FLOOR PLAN PLUMBING PROPOSED
P-2.12 SECOND FLOOR PLAN PLUMBING PROPOSED
P-2.13 THIRD FLOOR PLAN PLUMBING PROPOSED
P-9.00 PLUMBING DETAIL SHEET

ELECTRICAL:
E-0.00 ELECTRICAL TITLE SHEET
E-0.01 ELECTRICAL NOTES
E-2.11 MAIN FLOOR PLAN ELECTRICAL PROPOSED
E-2.12 SECOND FLOOR PLAN ELECTRICAL PROPOSED
E-2.13 THIRD FLOOR PLAN ELECTRICAL PROPOSED
E-3.01 ELECTRICAL SINGLE LINE DIAGRAM
E-9.00 ELECTRICAL DETAIL SHEET

LICENSED ARCHITECT
MICHAEL ALAN GARAVAGLIA
No. C-14823
REN. 1/31/23
STATE OF CALIFORNIA

COVER SHEET

PROJ. NO.	2023-024
SCALE	AS NOTED
DATE	17 MAR 2023
PHASE	SD
DRAWN	HA
CHECKED	AW

NO.	DATE	REVISION
	19 JUN 2023	RFP FOR CONSTRUCTION
	24 JUL 2023	PERMIT SUBMITTAL

SHEET NO.
A-0.00

ALL DRAWINGS AND WRITTEN MATERIAL APPEARING HEREIN CONSTITUTE ORIGINAL AND UNPUBLISHED WORK OF THE ARCHITECT AND MAY NOT BE DUPLICATED, USED, OR DISCLOSED WITHOUT WRITTEN CONSENT OF THE ARCHITECT.
COPYRIGHT 2023 GARAVAGLIA ARCHITECTURE, INC.

ARCHITECTURAL GENERAL NOTES

1. THE CONTRACT FOR CONSTRUCTION SHALL BE THE A.I.A. DOCUMENT A107 - STANDARD FORM OF AGREEMENT BETWEEN OWNER AND CONTRACTOR FOR A PROJECT OF LIMITED SCOPE, 2007 ed. AND A.I.A. DOCUMENT A201 - GENERAL CONDITIONS OF THE CONTRACT FOR CONSTRUCTION, 2007 ed.

2. THE ARCHITECT/OWNER SHALL SUBMIT DRAWINGS FOR PLAN CHECK. THE OWNER SHALL PAY FOR ALL PLAN CHECK FEES. THE CONTRACTOR SHALL PICK UP PERMITS.

3. ALL WORK SHALL CONFORM TO THE 2022 CALIFORNIA HISTORICAL BUILDING CODE, THE 2022 CALIFORNIA BUILDING CODE AS WELL AS TO THE LATEST EDITIONS OF THE ELECTRICAL, PLUMBING, MECHANICAL, AND ANY OTHER APPLICABLE CODES. ALL WORK SHALL CONFORM TO THE SECRETARY OF THE INTERIOR STANDARDS FOR REHABILITATION AS OUTLINED ON THIS SHEET.

4. ALL WORK SHALL CONFORM TO ALL LOCAL CODES AND/OR ORDINANCES.

5. ALL WORK SHALL BE COMPLETED SKILLFULLY AND IN ACCORDANCE WITH ACCEPTED TRADE STANDARDS.

6. EXCEPT WHERE CONTRACT DOCUMENTS INCLUDE MORE STRINGENT REQUIREMENTS, APPLICABLE INDUSTRY STANDARDS INCLUDING MANUFACTURER STANDARDS AND INSTALLATION INSTRUCTIONS HAVE THE SAME FORCE AND EFFECT AS IF BOUND OR COPIED INTO THE CONTRACT DOCUMENTS. SUCH STANDARDS ARE PART OF THE CONTRACT DOCUMENTS BY REFERENCE. WHERE COMPLIANCE WITH A STANDARD IS REQUIRED, COMPLY WITH THE STANDARD IN EFFECT AS OF THE DATE OF THE CONTRACT DOCUMENTS.

7. THE CONTRACTOR SHALL COORDINATE THE VARIOUS CONSTRUCTION ACTIVITIES TO ENSURE EFFICIENT AND ORDERLY INSTALLATION OF EACH PART OF THE WORK. COORDINATE CONSTRUCTION OPERATIONS THAT ARE DEPENDENT UPON EACH OTHER FOR PROPER INSTALLATION, CONNECTION, AND OPERATION.

8. CONTRACTOR SHALL COORDINATE WITH OWNER FOR OWNER PROVIDED MATERIALS.

9. CONTRACTOR SHALL COORDINATE WITH OWNER FOR REQUIRED SCHEDULING & ORDERING INFORMATION. CONTRACTOR SHALL ASSIST IN DETERMINING QUANTITIES WHEN REQUIRED.

10. CONTRACTOR SHALL PROVIDE OWNER W/ REQUESTED DELIVERY DATES FOR ALL P.B.O. PRODUCTS & KEEP OWNER ABREAST OF SCHEDULE REVISIONS. OWNER SHALL DETERMINE LEAD TIME FOR ALL PRODUCTS & HAVE PRODUCTS DELIVERED WHEN NEEDED BY CONTRACTOR.

11. CONTRACTOR SHALL INFORM THE ARCHITECT OF SCHEDULE REVISIONS.

12. CONTRACTOR SHALL INFORM THE ARCHITECT ON THE PROGRESS OF THE WORK ON A WEEKLY BASIS OR MORE FREQUENTLY AS CONDITIONS WARRANT.

13. CONTRACTOR SHALL SCHEDULE MEETINGS WITH THE ARCHITECT ON A TIMELY BASIS AND TO ALLOW FOR TIME REQUIRED TO PROVIDE APPROPRIATE RESPONSE TO ANY QUESTIONS OR SITE CONDITIONS.

14. CONTRACTOR SHALL ARRANGE FOR A PRECONSTRUCTION MEETING AND FOR ANOTHER MEETING AFTER DETERMINING THE PROJECT DIMENSIONAL LAYOUT FOR THE REVIEW BY THE ARCHITECT AND OWNER.

15. CONTRACTOR SHALL ALLOW TWO WEEKS FOR REVIEW BY THE ARCHITECT OF SUBMITTALS, SHOP DRAWINGS, SUBSTITUTIONS, AND RFI'S BY THE ARCHITECT. CONTRACTOR SHALL REVIEW ALL SUBMITTALS BEFORE ISSUING THEM TO THE ARCHITECT FOR REVIEW.

16. THE CONTRACTOR SHALL SUBMIT SHOP DRAWINGS TO THE ARCHITECT FOR REVIEW OF CONFORMANCE WITH DESIGN INTENT.

17. ALL CHANGE ORDERS SHALL BE IN WRITING AND SHALL BE SIGNED BY THE OWNER, ARCHITECT, AND CONTRACTOR. CHANGE ORDERS SHALL BE SIGNED PRIOR TO BEGINNING THE WORK OR ORDERING THE MATERIALS ADDRESSED IN THE CHANGE ORDER.

18. CONTRACTOR SHALL SUBMIT ALL DESIGN CHANGES OR SUBSTITUTIONS TO THE ARCHITECT FOR APPROVAL. THE ARCHITECT SHALL NOT BE RESPONSIBLE FOR ANY CHANGES IN PLANS, DETAILS, OR SPECIFICATIONS UNLESS APPROVED IN WRITING AND IN ADVANCE BY THE ARCHITECT.

19. THE CONTRACTOR SHALL NOTIFY THE ARCHITECT OF ALL MODIFICATIONS REQUESTED BY THE BUILDING DEPARTMENT, OR OFFICIAL HAVING JURISDICTION, AND OF ALL CHANGES REQUESTED BY THE INSPECTOR, OWNER, OR OTHERS. SUBSTITUTIONS WILL BE CONSIDERED, BUT DO NOT SUBSTITUTE DETAILS, EQUIPMENT, OR METHODS WITHOUT SPECIFIC WRITTEN APPROVAL BY THE ARCHITECT.

20. CONTRACTOR SHALL VERIFY WITH THE ARCHITECT CODE UPGRADE WORK NOT REQUIRED BY BUILDING INSPECTORS. IF THE CONTRACTOR BELIEVES CODE WORK IS NECESSARY, AND IT HAS NOT BEEN REQUIRED BY BUILDING INSPECTOR, THE ARCHITECT SHALL DETERMINE, WITH OWNER'S CONSENT, WHETHER WORK SHALL BE UNDERTAKEN.

21. REMODELING OR REHABILITATION OF AN EXISTING BUILDING REQUIRES THAT CERTAIN ASSUMPTIONS BE MADE REGARDING EXISTING CONDITIONS. BECAUSE SOME OF THE ASSUMPTIONS MAY NOT BE VERIFIABLE WITHOUT DESTROYING ADEQUATE OR SERVICEABLE PORTIONS OF THE BUILDING, THE CONTRACTOR SHALL VERIFY ALL QUESTIONS, CONDITIONS AND PROCEDURES WITH THE ARCHITECT PRIOR TO COMMENCING EACH PORTION OF THE WORK.

22. THE CONTRACTOR SHALL CONFIRM ALL EXISTING DIMENSIONS AND CONDITIONS IN THE FIELD PRIOR TO BEGINNING WORK. ANY DISCREPANCIES BETWEEN THE DRAWINGS AND FIELD CONDITIONS MUST BE BROUGHT TO THE IMMEDIATE ATTENTION OF THE ARCHITECT FOR CLARIFICATION PRIOR TO PROCEEDING WITH WORK. THE CONTRACTOR SHALL RESOLVE ANY DISCREPANCY PRIOR TO PROCEEDING WITH WORK.

23. WRITTEN DIMENSIONS SHALL TAKE PRECEDENCE OVER SCALED DIMENSIONS. DO NOT SCALE DRAWINGS. DIMENSIONS ARE TO THE FACE OF FINISH, UNLESS OTHERWISE NOTED.

24. WHERE CONSTRUCTION ABUTS ADJACENT PROPERTY OR AN EXISTING STRUCTURE, THE CONTRACTOR SHALL VERIFY, PRIOR TO THE START OF WORK, IF ANY CONDITIONS WILL AFFECT WORK PROGRESS OR CONFORMANCE TO THESE DOCUMENTS.

25. THE REMOVAL OR ALTERING IN ANY WAY OF EXISTING WORK SHALL BE CARRIED ON IN SUCH A MANNER AS TO PREVENT INJURY OR DAMAGE TO ANY PORTION(S) OF THE EXISTING WORK, WHICH REMAIN(S).

26. CONTRACTOR SHALL BE RESPONSIBLE FOR ANY DAMAGE INCURRED AS A RESULT OF THE WORK. ANY DAMAGE SHALL BE REPAIRED AT NO ADDITIONAL COST TO OWNER.

27. EXECUTE WORK TO ENSURE THE SAFETY OF PERSONS AND ADJACENT PROPERTY FROM DAMAGE CAUSED BY CONSTRUCTION OPERATIONS IN CONNECTION WITH THIS WORK. WHERE EXISTING CONSTRUCTION IS CUT, DAMAGED, OR REMODELED, PATCH OR REPLACE WITH MATERIALS TO MATCH IN KIND, QUALITY, AND PERFORMANCE WITH ADJACENT MATERIALS.

28. DO NOT NOTCH, BORE, OR CUT MEMBERS FOR PIPES, DUCTS, OR OTHER REASONS WITHOUT THE SPECIFIC, ADVANCE WRITTEN APPROVAL OF THE STRUCTURAL ENGINEER.

29. THE CONTRACTOR IS RESPONSIBLE FOR CAPPING OFF ANY UTILITY LINES DISTURBED DURING THE DEMOLITION AND CONSTRUCTION PROCESS THAT COULD BE A SAFETY HAZARD OR CAUSE DAMAGE TO THE BUILDING.

30. THE CONTRACTOR IS RESPONSIBLE FOR PROVIDING ALL TEMPORARY SUPPORTS, BARRICADES, AND SHORING AS REQUIRED DURING THE CONSTRUCTION PROCESS.

31. UNLESS OTHERWISE INDICATED, ALL NEW WORK SHALL MATCH EXISTING MATERIALS, DETAILS, TRIM, ETC. TO THE FULLEST EXTENT POSSIBLE. PROVIDE PRODUCTS OF THE SAME KIND AND FROM A SINGLE SOURCE.

32. PRIOR TO ORDERING OR FABRICATING MATERIAL, EQUIPMENT, OR PRODUCTS, THE CONTRACTOR SHALL DETERMINE THAT THE SIZE AND PRODUCTS INDICATED MEET THE INTENT OF THE CONTRACT DOCUMENTS.

33. THE CONTRACTOR SHALL INSPECT MATERIALS AND EQUIPMENT IMMEDIATELY UPON DELIVERY AND AGAIN PRIOR TO INSTALLATION. CONTRACTOR SHALL REJECT DAMAGED AND DEFECTIVE ITEMS.

34. CONTRACTOR SHALL INSTALL ALL EQUIPMENT, FIXTURES AND MATERIALS PER MANUFACTURER'S RECOMMENDATIONS. FOLLOW MANUFACTURER'S INSTRUCTIONS CAREFULLY. MANUFACTURER'S INSTRUCTIONS AND GUARANTEES SHALL BE GIVEN TO THE OWNER AT THE END OF THE JOB.

35. THE CONTRACTOR SHALL FLASH AND COUNTERFLASH TO S.M.A.C.N.A. STANDARDS, INDUSTRY STANDARDS, AND MANUFACTURER'S SPECIFICATIONS WHEREVER NECESSARY TO PROVIDE A WATERPROOF AND WEATHERPROOF CONSTRUCTION PROJECT.

36. IF OPENED IN COURSE OF WORK PROVIDE AND INSTALL NEW FIBERGLASS BATT INSULATION AS FOLLOWS, U.O.N.:
R-13 AT (N) EXTERIOR WALLS OR WALLS ADJACENT TO UNCONDITIONED SPACES
R-19 AT (E) AND (N) FLOORS,
R-19 AT (E) AND (N) ATTICS
R-19 AT (N) CEILINGS/FLOORS

37. WHERE GLASS IS BEING REPLACED IN (E) HISTORIC WINDOWS OR DOORS, PROVIDE AND INSTALL REPLACEMENT GLASS IN KIND. PROVIDE AND INSTALL TEMPERED GLAZING IN (N) NON-HISTORIC OPENINGS WHERE REQUIRED BY CODE.

38. CONTRACTOR SHALL INSPECT AND APPROVE STUCCO PLYWOOD SUBSTRATE AND BUILDING PAPER FOR PROPER INSTALLATION. ADEQUATE PREPARATION OF THE SUBSTRATE IS IMPERATIVE FOR PROPER BONDING OF THE PAINT. PREPARE EACH SUBSTRATE AS RECOMMENDED BY THE MANUFACTURER. CLEAN ALL SURFACES THROUGHOUT, REMOVE ANY PAINT WHERE BONDING FAILURE IS EVIDENT & ROUGHEN ANY SURFACES AS REQUIRED FOR ADHESION OF (N) PAINT.

39. CONTRACTOR SHALL PROVIDE AND INSTALL 5/8" WATER RESISTANT GYP. BD. AT ALL BATH, TOILET, AND LAUNDRY ROOM WALLS TO BE PAINTED. CONTRACTOR SHALL PROVIDE AND INSTALL CEMENTITIOUS BACKER BOARD, WONDER BOARD OR EQUAL AT ALL WALL AND CEILING SURFACES TO BE FINISHED WITH TILE.

40. ALL EXTERIOR EXPOSED WOOD TO BE APPROVED, NATURALLY WEATHER AND PEST RESISTANT, OR PRESSURE TREATED. ALL CUTS SHALL BE TREATED W/ PRESERVATIVE COATING BEFORE INSTALLATION. ALL METAL CONNECTORS AND FASTENERS IN CONTACT WITH TREATED WOOD SHALL BE HOT DIPPED GALVANIZED OR STAINLESS STEEL.

41. ALL FINISHES SHALL BE PAINTED AS FOLLOWS:
EXTERIOR: THREE COAT
STAIN & SEAL WHERE INDICATED
INTERIOR: TWO COAT FOR LIGHT INTERIOR, THREE COAT FOR DARK INTERIOR
STAIN & SEAL WHERE INDICATED
COLORS TO BE SELECTED BY THE ARCHITECT & OWNER. FINAL ACCEPTANCE OF COLORS WILL BE FROM JOB-APPLIED SAMPLES. PROVIDE FULL COAT FINISH SAMPLES ON SURFACES WITH A MINIMUM SIZE OF 4 SF FOR APPROVAL BY THE ARCHITECT & OWNER.

42. AS A MINIMUM, ALL INTERIOR WOOD TRIM SHALL BE PAINT GRADE, SOLID WOOD, (SPECIES TO BE DETERMINED) AND ALL EXTERIOR WOOD TRIM SHALL BE PAINT GRADE, WEATHER-RESISTANT WOOD.

43. CONTRACTOR SHALL CONTACT ARCHITECT FOR DECISIONS REGARDING ALL MATERIALS PROVIDED BY CONTRACTOR WHICH REQUIRE COLOR OR FINISH SELECTIONS.

44. PROVIDE COMPLETE FURRING AND SOFFITS TO INSTALL ALL HORIZONTAL AND VERTICAL HVAC DUCTS, VENTING AND PLUMBING. LOCATIONS AND CONFIGURATIONS TO BE REVIEWED BY ARCHITECT.

45. PLUMBING AND EQUIPMENT VENTING: WHERE FEASIBLE VENT ALL PLUMBING FIXTURES, EXHAUST VENTS, FURNACE, WATER HEATER, EXHAUST VENTS AND PLUMBING FIXTURES TO ROOF - COMBINE WHEN ALLOWED BY CODE. VERIFY ALL LOCATIONS OF VENTS WITH ARCHITECT PRIOR TO INSTALLATION.

46. THE CONTRACTOR SHALL KEEP THE JOB SITE CLEAN AND SAFE AT ALL TIMES, INCLUDING CLEANING MATERIALS, PROTECTING CONSTRUCTION IN PROGRESS AND ADJOINING MATERIALS IN PLACE. PROVIDE TEMPORARY, PROTECTIVE COVERINGS WHERE NECESSARY TO ENSURE PROTECTION FROM DAMAGE OR DETERIORATION.

47. CONTRACTOR SHALL PERIODICALLY CLEAN AND MAINTAIN COMPLETED CONSTRUCTION ON A REGULAR BASIS. AT THE COMPLETION OF THE PROJECT, PROVIDE A FINAL CLEANING OF ALL SURFACES. POLISH ALL GLASS, BROOM SWEEP EXTERIOR SURFACES, AND VACUUM ALL INTERIOR FLOORS. CONTRACTOR SHALL LEAVE THE PREMISES CLEAN AND ORDERLY AND READY FOR OCCUPANCY.

48. CONTRACTOR SHALL DISPOSE OF ALL DEBRIS AND WASTE OFF SITE IN A LEGAL MANNER ON A REGULAR BASIS TO PREVENT EXCESS ACCUMULATION ON SITE.

49. CONTRACTOR IS TO INSPECT THE (E) BLDG FOR ANY ADDITIONAL PROBLEMS OR CONCERNS (STRUCTURAL, FINISH, MECHANICAL, ETC.) WHICH ARE NOT REFLECTED IN THE DRAWINGS & NOTATIONS. REPORT ANY FINDINGS TO THE ARCHITECT DURING BID PHASE AND BEFORE PROCEEDING WITH WORK.

50. ELECTRICAL, MECHANICAL (HVAC), AND PLUMBING SYSTEMS SHALL BE "DESIGN/BUILD." PERFORMANCE SPECIFICATIONS SHALL BE REVIEWED BY THE ARCHITECT BEFORE COMMENCEMENT OF THE WORK (I.E. FURNACE SIZE AND TYPE, ELECTRICAL PANEL SIZES.)

SECRETARY OF THE INTERIOR STANDARDS FOR REHABILITATION

1. A PROPERTY WILL BE USED AS IT WAS HISTORICALLY OR BE GIVEN A NEW USE THAT REQUIRES MINIMAL CHANGE TO ITS DISTINCTIVE MATERIALS, FEATURES, SPACES AND SPATIAL RELATIONSHIPS.

2. THE HISTORIC CHARACTER OF A PROPERTY WILL BE RETAINED AND PRESERVED. THE REMOVAL OF DISTINCTIVE MATERIALS OR ALTERATION OF FEATURES, SPACES, AND SPATIAL RELATIONSHIPS THAT CHARACTERIZE A PROPERTY WILL BE AVOIDED.

3. EACH PROPERTY WILL BE RECOGNIZED AS A PHYSICAL RECORD OF ITS TIME, PLACE, AND USE. CHANGES THAT CREATE A FALSE SENSE OF HISTORICAL DEVELOPMENT, SUCH AS ADDING CONJECTURAL FEATURES OR ELEMENTS FROM OTHER HISTORIC PROPERTIES, WILL NOT BE UNDERTAKEN.

4. CHANGES TO A PROPERTY THAT HAVE ACQUIRED HISTORIC SIGNIFICANCE IN THEIR OWN RIGHT WILL BE RETAINED AND PRESERVED.

5. DISTINCTIVE MATERIALS, FEATURES, FINISHES AND CONSTRUCTION TECHNIQUES OR EXAMPLES OF CRAFTSMANSHIP THAT CHARACTERIZE A PROPERTY WILL BE PRESERVED.

6. DETERIORATED HISTORIC FEATURES WILL RE REPAIRED RATHER THAN REPLACED. WHERE THE SEVERITY OF DETERIORATION REQUIRES REPLACEMENT OF A DISTINCTIVE FEATURE, THE NEW FEATURE WILL MATCH THE OLD IN DESIGN, COLOR, TEXTURE, AND, WHERE POSSIBLE, MATERIALS. REPLACEMENT OF MISSING FEATURES WILL BE SUBSTANTIATED BY DOCUMENTARY AND PHYSICAL EVIDENCE.

7. CHEMICAL OR PHYSICAL TREATMENTS, IF APPROPRIATE, WILL BE UNDERTAKEN USING THE GENTLEST MEANS POSSIBLE. TREATMENTS THAT CAUSE DAMAGE TO HISTORIC MATERIALS WILL NOT BE USED.

8. ARCHEOLOGICAL RESOURCES WILL BE PROTECTED AND PRESERVED IN PLACE. IF SUCH RESOURCES MUST BE DISTURBED, MITIGATION MEASURES WILL BE UNDERTAKEN.

9. NEW ADDITIONS, EXTERIOR ALTERATIONS, OR RELATED NEW CONSTRUCTION WILL NOT DESTROY HISTORIC MATERIALS, FEATURES, AND SPATIAL RELATIONSHIPS THAT CHARACTERIZE THE PROPERTY. THE NEW WORK WILL BE DIFFERENTIATED FROM THE OLD AND WILL BE COMPATIBLE WITH THE HISTORIC MATERIALS, FEATURES, SIZE, SCALE AND PROPORTION, AND MASSING TO PROTECT THE INTEGRITY OF THE PROPERTY AND ITS ENVIRONMENT.

10. NEW ADDITIONS AND ADJACENT OR RELATED NEW CONSTRUCTION WILL BE UNDERTAKEN IN SUCH A MANNER THAT, IF REMOVED IN THE FUTURE, THE ESSENTIAL FORM AND INTEGRITY OF THE HISTORIC PROPERTY AND ITS ENVIRONMENT WOULD BE UNIMPAIRED.

FOR COMPLETE TEXT AND GUIDELINES, GO TO:
https://www.nps.gov/tps/standards/rehabilitation.htm

ARCHITECTURAL REPLACEMENT OF MISSING HISTORICAL ELEMENTS

1. ALL WORK FOR THIS PROJECT SHALL CONFORM TO THE SECRETARY OF THE INTERIOR STANDARDS FOR REHABILITATION. THESE STANDARDS ARE LISTED ON THIS SHEET.

2. THE REPLACEMENT OF MISSING HISTORICAL CONSTRUCTION ELEMENTS REQUIRES THE FULL ATTENTION AND COOPERATION OF THE CONTRACTOR. THE CONTRACTOR SHOULD DEVELOP A SYSTEM OR PROCESS OF RECORDATION PRIOR TO THE START OF ANY WORK.

3. EVERY EFFORT SHALL BE MADE TO REPAIR, RATHER THAN REPLACE, EXISTING ELEMENTS. SUCH REPAIR MAY INCLUDE REPLACEMENT OF EXTENSIVELY DETERIORATED OR MISSING ELEMENTS.

4. HISTORICAL PHYSICAL AND PICTORIAL DOCUMENTATION, IN ADDITION TO SURVIVING PROTOTYPES, WILL BE THE BASIS FOR ANY HISTORIC RESTORATION. MEASURE AND DOCUMENT ALL EXISTING DETAILS PRIOR TO START OF ANY REPAIR OR REPLACEMENT WORK,

5. THE USE OF SALVAGED MATERIALS IS STRONGLY ENCOURAGED AS A MEANS OF REPLACING FEATURES NO LONGER COMMONLY AVAILABLE. THIS OPTION SHALL BE GIVEN THE HIGHEST PRIORITY WHEN IT IS NOT FEASIBLE TO REPAIR A DETERIORATED ELEMENT.

6. CONTRACTOR SHALL DOCUMENT THE LOCATION, ORIENTATION AND ANY OTHER INFORMATION THAT WILL AID IN THE CORRECT REINSTALLATION OF AN ELEMENT PRIOR TO REMOVAL AND STORAGE OF THAT ELEMENT AS REQUIRED BY THE CONTRACT DOCUMENTS OR AS MIGHT BE REQUIRED TO ALLOW OTHER WORK TO PROCEED.

7. PROTECT ALL EXISTING ELEMENTS DURING ALL PHASES OF CONSTRUCTION WORK.

8. CONTRACTOR SHALL PROVIDE HISTORICAL ELEMENT SHOP DRAWINGS AS OUTLINED BELOW.

9. CONTRACTOR SHALL MEASURE AND DOCUMENT ON HISTORICAL ELEMENT SHOP DRAWINGS THE "GHOSTING" OF MISSING ELEMENTS REQUIRING REPLACEMENT AND THEIR LOCATIONS. THE CONTRACTOR SHALL ALSO RECORD ON THESE SHOP DRAWINGS ANY OTHER RELEVANT INFORMATION REGARDING THESE MISSING ELEMENTS THAT CAN BE GLEANED FROM THE FIELD. THESE MEASUREMENTS SHALL BE RECORDED ONTO THESE SHOP DRAWINGS AT AN APPROPRIATE SCALE AND SUBMITTED TO THE ARCHITECT FOR REVIEW.

10. THE CONTRACTOR SHALL NOTE ON THE HISTORICAL ELEMENT SHOP DRAWINGS THE MATERIALS OF IN SITU ELEMENTS AND PROPOSE ALTERNATIVE MATERIALS, SHOULD THE IN SITU MATERIALS NO LONGER BE AVAILABLE.

11. THE HISTORICAL ELEMENT SHOP DRAWINGS SHALL SHOW HOW THE CONTRACTOR INTENDS TO FABRICATE AND INSTALL THESE ELEMENTS. THE ARCHITECT WILL REVIEW THESE SHOP DRAWINGS FOR DESIGN INTENT.

12. ONCE THE ARCHITECT HAS HAD AN OPPORTUNITY TO REVIEW THESE SHOP DRAWINGS, THE ARCHITECT AND CONTRACTOR SHALL ARRANGE A SPECIAL COORDINATION MEETING TO REVIEW THE INTERPRETATION PROPOSED BY THE ARCHITECT AND THE RECONSTRUCTION METHOD PROPOSED BY THE CONTRACTOR.

13. THE ARCHITECT WILL THEN ISSUE THE REVIEWED HISTORICAL ELEMENT SHOP DRAWINGS TO THE CONTRACTOR WITH APPROPRIATE COMMENTS.

ARCHITECTURAL ABBREVIATIONS

∠	ANGLE
@	AT
℄	CENTERLINE
#	POUND OR NUMBER
(E)	EXISTING
(N)	NEW
A.F.F.	ABOVE FINISH FLOOR
ACOUS.	ACOUSTICAL
ADJ.	ADJUSTABLE
AGGR.	AGGREGATE
ALUM.	ALUMINUM
APPROX.	APPROXIMATE
ARCH.	ARCHITECTURAL
ASPH.	ASPHALT
BM.	BEAM
BTWN.	BETWEEN
BITUM.	BITUMINOUS
BLKG.	BLOCKING
BD.	BOARD
BOT.	BOTTOM
BLDG.	BUILDING
CLG.	CEILING
CEM.	CEMENT
CER.	CERAMIC
CLR.	CLEAR
CLO.	CLOSET
COL.	COLUMN
CONC.	CONCRETE
CONT.	CONTINUOUS
CORR.	CORRIDOR
DTL.	DETAIL
DIA.	DIAMETER
DIM.	DIMENSION
DR.	DOOR
D.H.	DOUBLE HUNG
DN	DOWN
DWG.	DRAWING
EA.	EACH
ELEC.	ELECTRICAL
ELEV.	ELEVATION / ELEVATOR
EQ.	EQUAL
E.J.	EXPANSION JOINT
EXT.	EXTERIOR
F.O.C.	FACE OF CONCRETE
FOF	FACE OF FINISH
FOS	FACE OF STUD
FIN.	FINISH
F.E.	FIRE EXTINGUISHER
FLR.	FLOOR
FD	FLOOR DRAIN
FLUOR.	FLUORESCENT
FT.	FOOT OR FEET
FTG.	FOOTING
F.A.U.	FORCED AIR UNIT
FDN.	FOUNDATION
FURR.	FURRING
GALV.	GALVANIZED
GA.	GAUGE
GL.	GLASS
GYP.	GYPSUM
HT.	HEIGHT
H.P.	HIGH POINT
H.C.	HOLLOW CORE
H.B.	HOSE BIBB
HR.	HOUR
INSUL.	INSULATION
INT.	INTERIOR
ID	INSIDE DIAMETER
KIT.	KITCHEN
LAM.	LAMINATE
LAV.	LAVATORY
L.P.	LOW POINT
M.O.	MASONRY OPENING
MAX.	MAXIMUM
MECH.	MECHANICAL
MTL.	METAL
MIN.	MINIMUM
N.A.	NOT APPLICABLE
N.I.C.	NOT IN CONTRACT
N.T.S.	NOT TO SCALE
NO.	NUMBER
O.C.	ON CENTER
OPNG.	OPENING
OPP.	OPPOSITE
OFOS	OUTSIDE FACE OF STUD
o/	OVER
OD	OUTSIDE DIAMETER
OFD	OVERFLOW DRAIN
PTD	PAINTED
PR	PAIR
PART.	PARTITION
PERM.	PERMANENT
PLAS.	PLASTER
PL.	PLATE
PLUMB.	PLUMBING
PLYWD.	PLYWOOD
PT.	POINT
PREFIN.	PREFINISHED
PTDF	PRESSURE TREATED DOUGLAS FIR
P.B.O.	PROVIDED BY OWNER
R.	RADIUS
RWL	RAIN WATER LEADER
REF.	REFRIGERATOR
REINF.	REINFORCED
REQ.	REQUIRED
R.D.	ROOF DRAIN
RM.	ROOM
R.O.	ROUGH OPENING
S.S.D.	SEE STRUCTURAL DRAWINGS
SHT.	SHEET
SMACNA	SHEET METAL AND AIR CONDITIONING CONTRACTORS' NATIONAL ASSOCIATION
SIM.	SIMILAR
S.H.	SINGLE HUNG
S.C.	SOLID CORE
SPEC.	SPECIFICATION
SQ.	SQUARE
S.S.	STAINLESS STEEL
STOR.	STORAGE
STRUCT.	STRUCTURAL
SUSP.	SUSPENDED
SYM.	SYMBOL
TEL.	TELEPHONE
TOI.	TOILET
T&G	TONGUE AND GROOVE
T.O.	TOP OF
T.O.C.	TOP OF CURB
T.O.W.	TOP OF WALL
TYP.	TYPICAL
U.O.N.	UNLESS OTHERWISE NOTED
VERT.	VERTICAL
VEST.	VESTIBULE
W.C.	WATER CLOSET
W/	WITH
W/O	WITHOUT
WD.	WOOD

ARCHITECTURAL SYMBOLS

(E) CONSTRUCTION TO REMAIN
(N) 2x WOOD FRAME CONSTRUCTION
(E) CONSTRUCTION TO BE REMOVED
MASONRY WALL
CONCRETE WALL
CMU WALL
LINE ABOVE
LINE BELOW
PROPERTY LINE
CENTER LINE
DETAIL (1 / A1.01)
SECTION (1 / A1.01)
ELEVATION (1 / A1.01)
INTERIOR ELEVATION (A, B, C, D / 1 / A1.01)
DOOR TYPE (A)
WINDOW TYPE (XXX)
WALL TYPE (X)
ELEVATION POINT (0'-0")
DATUM LAYOUT POINT
ELEVATION LAYOUT POINT (1ST FLR. 0'-0")
REVISION (1)
COLUMN GRID (X)
KEYNOTE (1)
CEILING HEIGHT (0'-0")

GARAVAGLIA ARCHITECTURE INC.
582 MARKET STREET
SUITE 1800
SAN FRANCISCO, CA 94104
T: 415.391.9633
F: 415.391.9647
www.garavaglia.com

1628 WEBSTER STREET

ALAMEDA, CALIFORNIA

CONVERSION TO AFFORDABLE HOUSING

LICENSED ARCHITECT
MICHAEL ALAN GARAVAGLIA
No. C-14893
REN. 1/31/23
STATE OF CALIFORNIA

GENERAL NOTES

PROJ. NO.	2023-024
SCALE	AS NOTED
DATE	17 MAR 2023
PHASE	SD
DRAWN	HA
CHECKED	AW

NO.	DATE	REVISION
	19 JUN 2023	RFP FOR CONSTRUCTION
	24 JUL 2023	PERMIT SUBMITTAL

SHEET NO.
A-0.01

ALL DRAWINGS AND WRITTEN MATERIAL APPEARING HEREIN CONSTITUTE ORIGINAL AND UNPUBLISHED WORK OF THE ARCHITECT AND MAY NOT BE DUPLICATED, USED, OR DISCLOSED WITHOUT WRITTEN CONSENT OF THE ARCHITECT.
COPYRIGHT 2023 GARAVAGLIA ARCHITECTURE, INC.

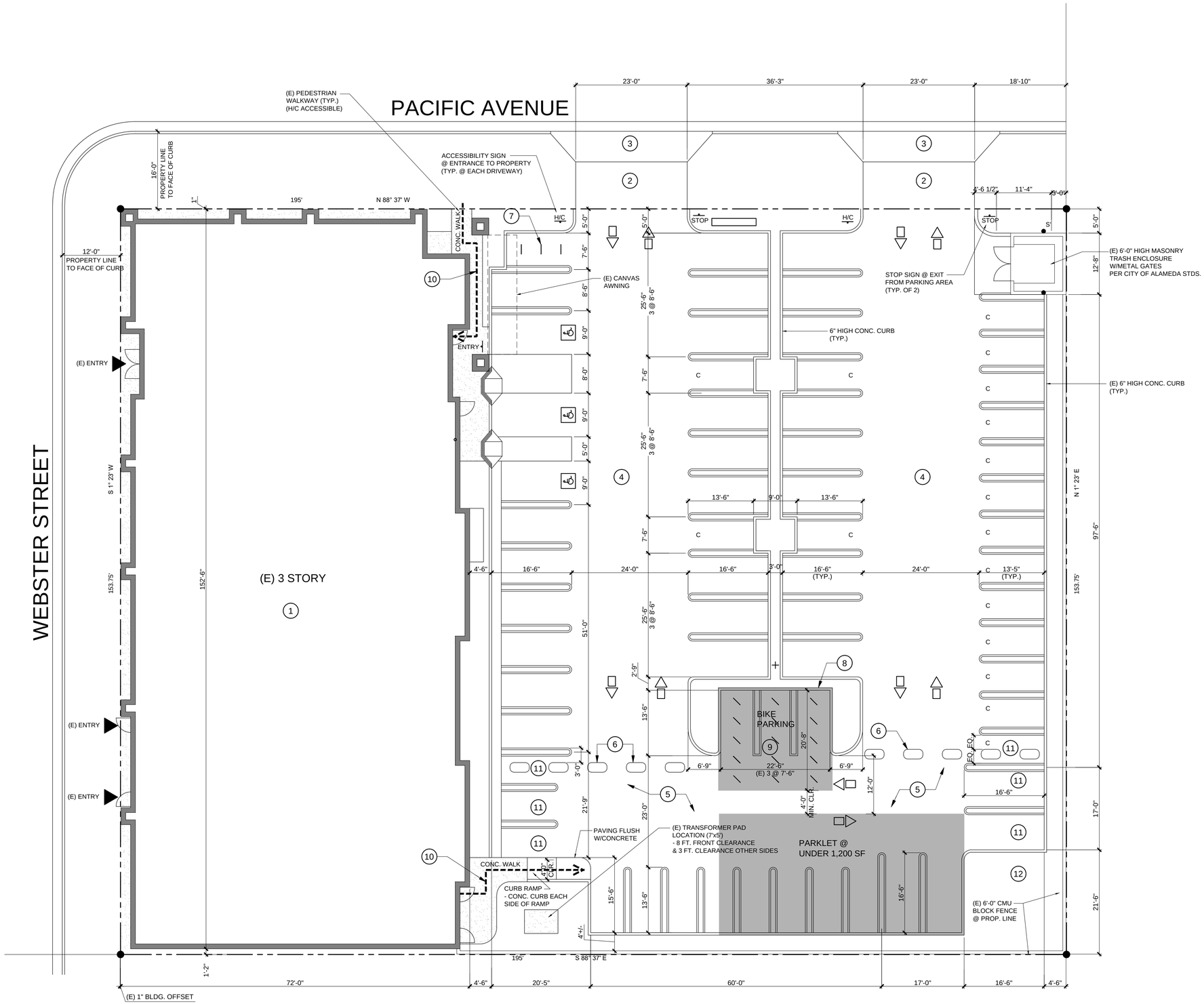

1 SITE PLAN
SCALE: 1" = 10'-0"

SHEET NOTES

1. PROPERTY LINES, EXISTING STRUCTURE LOCATION, SITE FEATURES, ARE BASED ON ORIGINAL PERMITTED AND BUILT CONDITIONS.
2. SETBACKS SHOWN ARE PER BUILT CONDITIONS
3. PARKING SPACE LAYOUT SHOWN ARE (E)

KEY NOTES

1. (E) BUILDING
2. (E) DRIVEWAY
3. (E) CURB CUT
4. (E) DRIVE AISLE TO REMAIN
5. (E) DRIVE AISLE TO BE ABANDONED
6. (N) 4'x2' OVAL GALVANIZED WATER TROUGH PLANTERS (5 EACH ROW) @ 8'-0" o.c., CENTERED BETWEEN CURBS, TYP.
7. 3 (N) INVERTED U BIKE RACKS w/ SPACING CAN CLEARANCE PER CITY BICYCLE FACILITY DESIGN STANDARDS
8. (N) CHAINLINK LONG TERM BIKE PARKING ENCLOSURE, w/ MIN. INTERIOR CLEAR DIMENSIONS BASED ON CITY BICYCLE FACILITY DESIGN STANDARDS
9. 15 (N) INVERTED U BIKE RACKS TO ACCOMMODATE 30 BIKES IN DIAGONAL LAYOUT w/ SPACING AND CLEARANCE PER CITY BICYCLE FACILITY DESIGN STANDARDS
10. (E) ACCESSIBLE PATH OF TRAVEL
11. (E) PARKING SPACE TO BE USED AS PART OF RESIDENT OPEN SPACE
12. (N) STAKED 2x6 PTDF PERIMETER CURB w/ 4" OF PEA GRAVEL o/ WEED CLOTH AROUND (E) TREE

GARAVAGLIA ARCHITECTURE INC.
582 MARKET STREET
SUITE 1800
SAN FRANCISCO, CA 94104
T: 415.391.9633
F: 415.391.9647
www.garavaglia.com

1628 WEBSTER STREET
ALAMEDA, CALIFORNIA

CONVERSION TO AFFORDABLE HOUSING

LICENSED ARCHITECT MICHAEL ADAM GARAVAGLIA No. C-14833 REN. 1/31/23 STATE OF CALIFORNIA

SITE PLAN
EXISTING

PROJ. NO.	2023-024
SCALE	1"=10'-0"
DATE	17 MAR 2023
PHASE	SD
DRAWN	HA
CHECKED	AW

NO.	DATE	REVISION
	19 JUN 2023	RFP FOR CONSTRUCTION
	24 JUL 2023	PERMIT SUBMITTAL

SHEET NO.
A-1.01

ALL DRAWINGS AND WRITTEN MATERIAL APPEARING HEREIN CONSTITUTE ORIGINAL AND UNPUBLISHED WORK OF THE ARCHITECT AND MAY NOT BE DUPLICATED, USED, OR DISCLOSED WITHOUT WRITTEN CONSENT OF THE ARCHITECT. COPYRIGHT 2023 GARAVAGLIA ARCHITECTURE, INC.

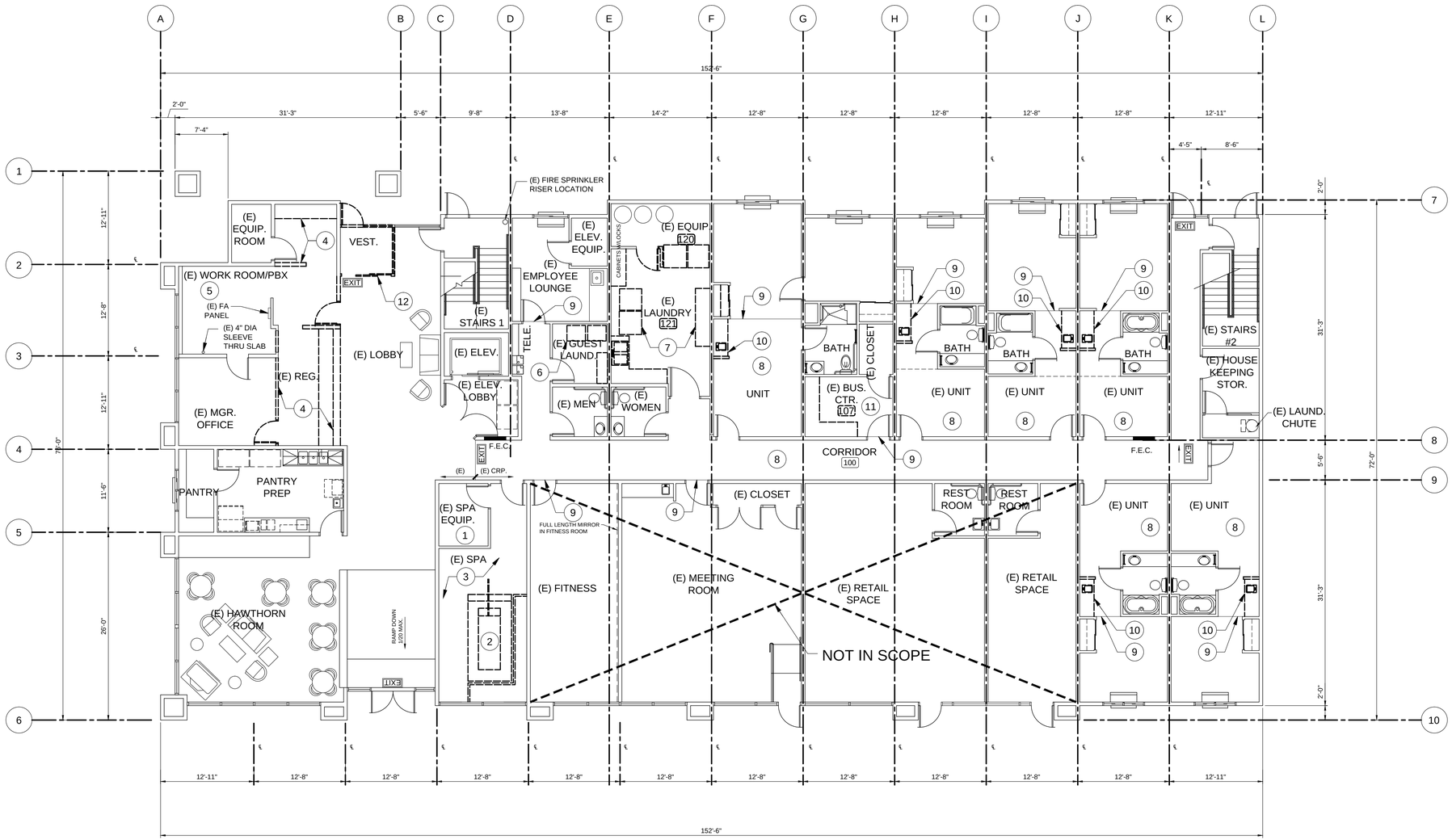

1 MAIN FLOOR PLAN

SCALE: 1/8" = 1'-0"

SHEET NOTES

1. PROTECT IN PLACE ALL EXISTING (E) ELEMENTS TO REMAIN, TO PREVENT DAMAGE OF ADJACENT AREAS DURING DEMOLITION
2. DEMOLISH AND REMOVE COMPLETE, ITEMS SHOWN DASHED OR NOTED FOR DEMOLITION
3. MOVE ITEMS NOTED FOR SALVAGE TO OWNER'S DESIGNATED STORAGE LOCATION, PROTECTED FROM WEATHER AND RAISED ABOVE GROUND SURFACE, UON
4. WALL FINISH NOTED FOR DEMOLITION TO BE REMOVED BACK TO FACE OF STUD, UON
5. COORDINATE DEMOLITION SCOPE W/ MEP DRAWINGS FOR LOCATIONS OF (E) & (N)SYSTEM ELEMENTS
6. REFER TO ARCHITECTURAL GENERAL NOTES FOR ADDITIONAL DEMOLITION-SPECIFIC REQUIREMENTS
7. REMOVE (E) KEY CARD LOCKSET @ ALL UNIT ENTRY DOORS
8. DEMO ALL HEADBOARDS FROM (E) HOTEL ROOMS
9. ADD ALTERNATE #1: DEMO (E) LAUNDRY CHUTE

KEY NOTES

1. REMOVE ALL (E) SPA EQUIPMENT w/ ALL UTILITIES SAFED OUT AND PIPING CAPPED OFF BEHIND WALL FINISH / BELOW FLOOR.
2. (E) SPA TO BE REMOVED COMPLETE w/ ALL LINES TO EQUIPMENT REMOVED
3. (E) SPA TILE FLOORING, BASE AND WAINSCOT TO BE REMOVED BACK TO FACE OF GYP BD.
4. REMOVE COMPLETE ALL PARTITIONS & CABINETRY; MAINTAIN PRIMARY CEILING GRID AND ACOUSTIC TILES; SALVAGE ALL DOORS FOR REUSE IN RECONFIGURED OFFICE SPACE;
5. PROTECT (E) PBX SYSTEM AND COORDINATE w/ OWNER ON ALL (E) LOW VOLTAGE SYSTEMS
6. REMOVE (E) GUEST LAUNDRY EQUIPMENT w/ ALL UTILITIES SAFED OUT AND PIPING CAPPED OFF BEHIND WALL FINISH / BELOW FLOOR.
7. REMOVE (E) COMMERCIAL LAUNDRY EQUIPMENT & ACCESSORIES w/ ALL UTILITIES SAFED OUT AND PIPING CAPPED OFF BEHIND WALL FINISH / BELOW FLOOR.
8. REMOVE (E) CARPETING DOWN TO SUB FLOOR; SEE PROPOSED TO COORDINATE ON LIMITS OF REMOVAL WITHIN EACH RESIDENTIAL UNIT
9. LIMIT OF (E) CARPET REMOVAL
10. REMOVE (E) WET BAR CABINETRY, CORRIDOR SIDE WING WALL; SALVAGE (E) SINK & FAUCET FOR REINSTALLATION, AND RETAIN ELECTRICAL, SUPPLY & DRAIN CONNECTIONS
11. REMOVE ALL (E) CABINETRY, LEAVING ALL SYSTEMS IN PLACE; REMOVE AND SALVAGE (E) ENTRY DOOR
12. SALVAGE (E) SLIDING ALUMINUM STOREFRONT EXIT DOOR ASSEMBLY COMPLETE FOR RE-INSTALLATION

GARAVAGLIA ARCHITECTURE INC.
582 MARKET STREET
SUITE 1800
SAN FRANCISCO, CA 94104
T: 415.391.9633
F: 415.391.9647
www.garavaglia.com

1628 WEBSTER STREET

ALAMEDA, CALIFORNIA

CONVERSION TO AFFORDABLE HOUSING

LICENSED ARCHITECT MICHAEL ALAN GARAVAGLIA No. C-14833 REN. 1/31/23 STATE OF CALIFORNIA

MAIN FLOOR PLAN

EXISTING / DEMO

PROJ. NO.	2023-024
SCALE	1/8"=1'-0"
DATE	17 MAR 2023
PHASE	SD
DRAWN	HA
CHECKED	AW

NO.	DATE	REVISION
	19 JUN 2023	RFP FOR CONSTRUCTION
	24 JUL 2023	PERMIT SUBMITTAL

SHEET NO.

A-2.01

ALL DRAWINGS AND WRITTEN MATERIAL APPEARING HEREIN CONSTITUTE ORIGINAL AND UNPUBLISHED WORK OF THE ARCHITECT AND MAY NOT BE DUPLICATED, USED, OR DISCLOSED WITHOUT WRITTEN CONSENT OF THE ARCHITECT. COPYRIGHT 2023 GARAVAGLIA ARCHITECTURE, INC.

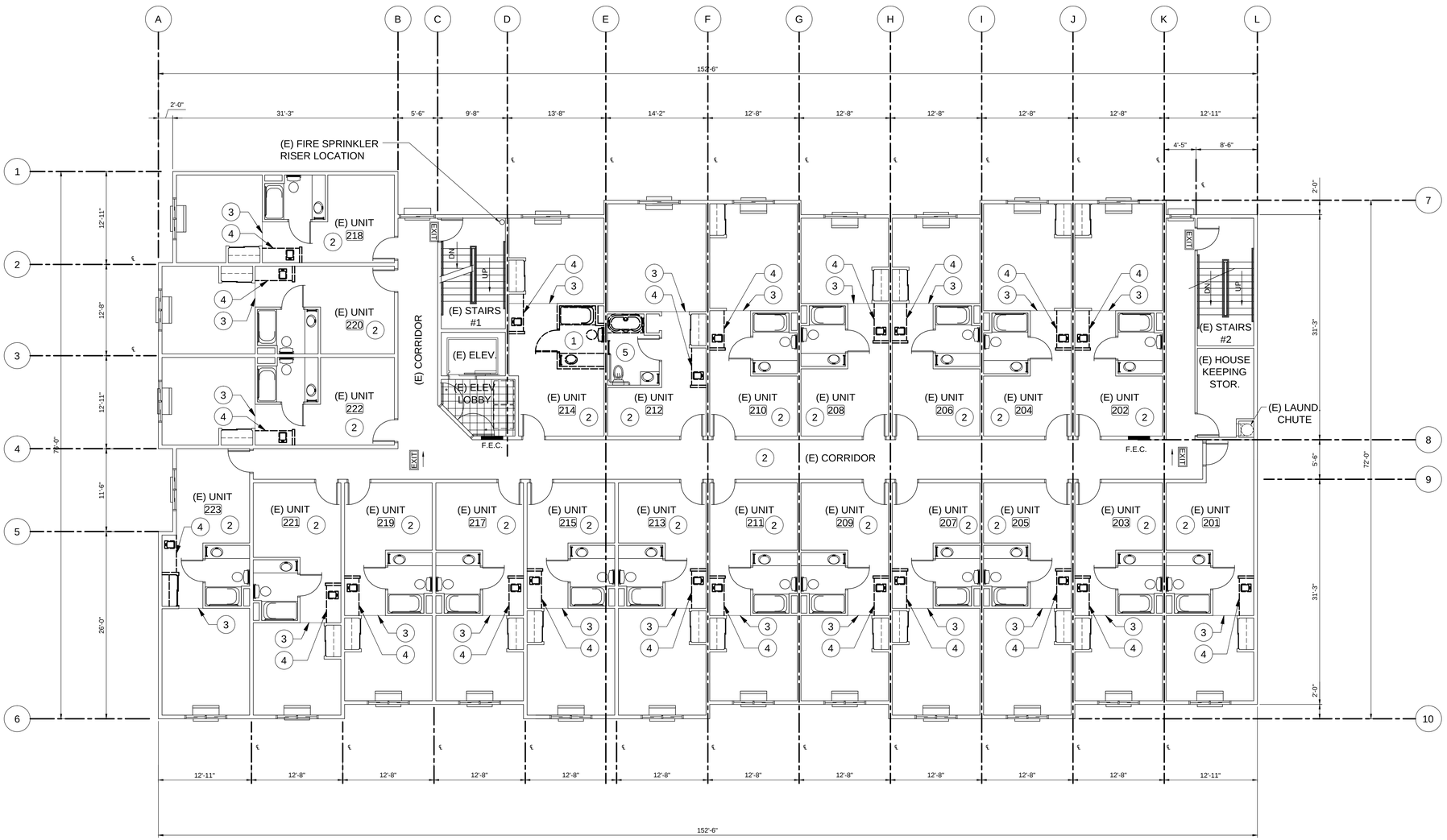

1 SECOND FLOOR PLAN

SCALE: 1/8" = 1'-0"

0' 4' 8' 16'

N

SHEET NOTES

1. PROTECT IN PLACE ALL EXISTING (E) ELEMENTS TO REMAIN, TO PREVENT DAMAGE OF ADJACENT AREAS DURING DEMOLITION
2. DEMOLISH AND REMOVE COMPLETE, ITEMS SHOWN DASHED OR NOTED FOR DEMOLITION
3. MOVE ITEMS NOTED FOR SALVAGE TO OWNER'S DESIGNATED STORAGE LOCATION, PROTECTED FROM WEATHER AND RAISED ABOVE GROUND SURFACE, UON
4. WALL FINISH NOTED FOR DEMOLITION TO BE REMOVED BACK TO FACE OF STUD, UON
5. COORDINATE DEMOLITION SCOPE W/ MEP DRAWINGS FOR LOCATIONS OF (E) & (N)SYSTEM ELEMENTS
6. REFER TO ARCHITECTURAL GENERAL NOTES FOR ADDITIONAL DEMOLITION-SPECIFIC REQUIREMENTS
7. REMOVE (E) KEY CARD LOCKSET @ ALL UNIT ENTRY DOORS
8. DEMO ALL HEADBOARDS FROM (E) HOTEL ROOMS
9. ADD ALTERNATE #1: DEMO (E) LAUNDRY CHUTE

KEY NOTES

1. REMOVE BATHROOM PARTITIONS; SALVAGE CABINETRY, FIXTURES AND ACCESSORIES FOR REINSTALLATION IN RECONFIGURED BATHROOM;
2. REMOVE (E) CARPETING DOWN TO SUB FLOOR; SEE PROPOSED TO COORDINATE ON LIMITS OF REMOVAL WITHIN EACH RESIDENTIAL UNIT
3. LIMIT OF (E) CARPET REMOVAL
4. REMOVE (E) WET BAR CABINETRY, CORRIDOR SIDE WING WALL; SALVAGE (E) SINK & FAUCET FOR REINSTALLATION, AND RETAIN ELECTRICAL, SUPPLY & DRAIN CONNECTIONS
5. REMOVE (E) SPA TUB FOR REPLACEMENT w/ ROLL-IN SHOWER STALL

GARAVAGLIA ARCHITECTURE INC.
582 MARKET STREET
SUITE 1800
SAN FRANCISCO, CA 94104
T: 415.391.9633
F: 415.391.9647
www.garavaglia.com

1628 WEBSTER STREET

ALAMEDA, CALIFORNIA

CONVERSION TO AFFORDABLE HOUSING

LICENSED ARCHITECT
NICHOLAS ANTON GARAVAGLIA
No. C-14833
REN. 1/31/23
STATE OF CALIFORNIA

SECOND FLOOR PLAN

EXISTING / DEMO

PROJ. NO.	2023-024
SCALE	1/8"=1'-0"
DATE	17 MAR 2023
PHASE	SD
DRAWN	HA
CHECKED	AW

NO.	DATE	REVISION
	19 JUN 2023	RFP FOR CONSTRUCTION
	24 JUL 2023	PERMIT SUBMITTAL

SHEET NO.

A-2.02

ALL DRAWINGS AND WRITTEN MATERIAL APPEARING HEREIN CONSTITUTE ORIGINAL AND UNPUBLISHED WORK OF THE ARCHITECT AND MAY NOT BE DUPLICATED, USED, OR DISCLOSED WITHOUT WRITTEN CONSENT OF THE ARCHITECT.
COPYRIGHT 2023 GARAVAGLIA ARCHITECTURE, INC.

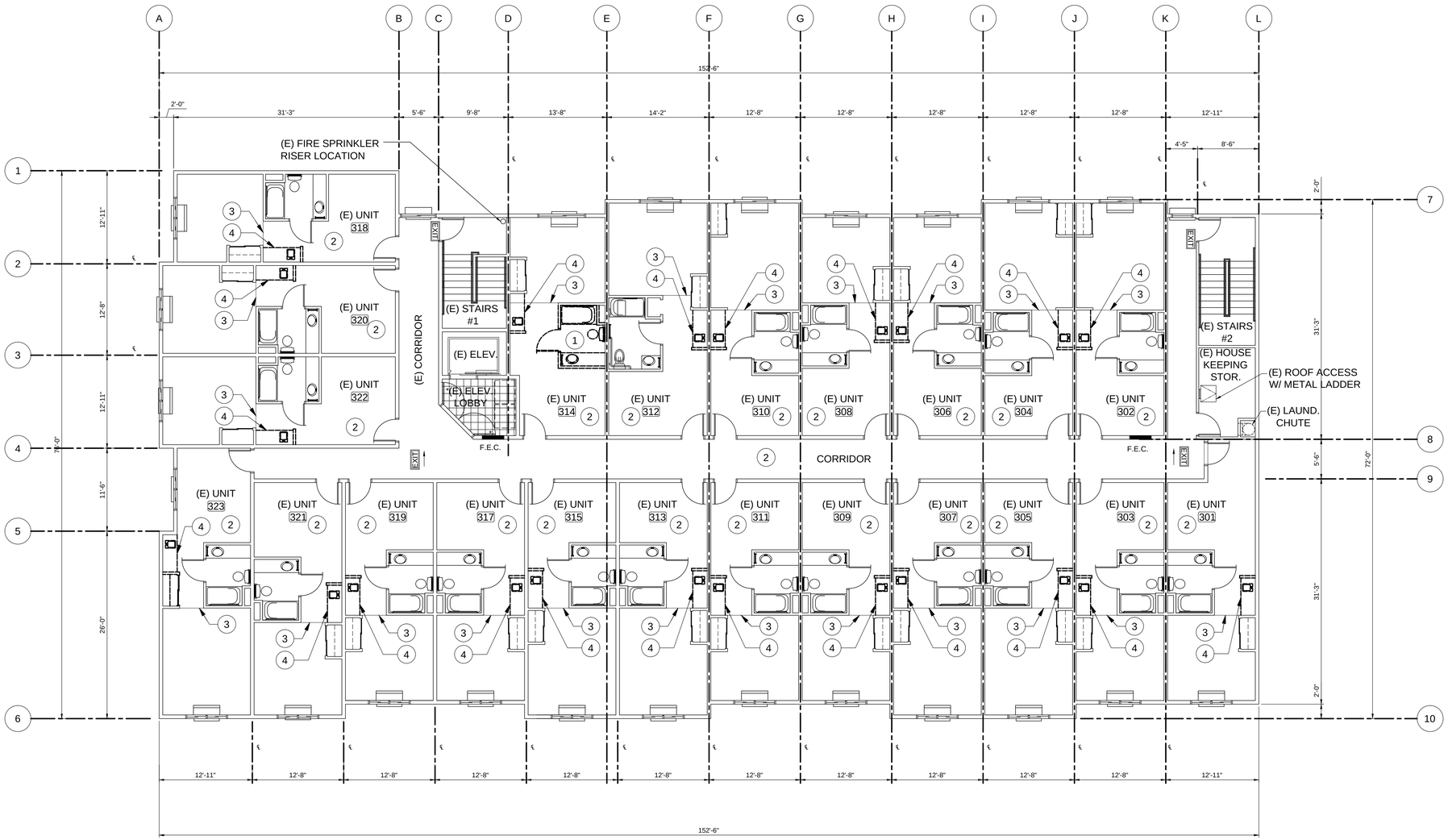

1 THIRD FLOOR PLAN

SCALE: 1/8" = 1'-0"

N

0' 4' 8' 16'

SHEET NOTES

1. PROTECT IN PLACE ALL EXISTING (E) ELEMENTS TO REMAIN, TO PREVENT DAMAGE OF ADJACENT AREAS DURING DEMOLITION
2. DEMOLISH AND REMOVE COMPLETE, ITEMS SHOWN DASHED OR NOTED FOR DEMOLITION
3. MOVE ITEMS NOTED FOR SALVAGE TO OWNER'S DESIGNATED STORAGE LOCATION, PROTECTED FROM WEATHER AND RAISED ABOVE GROUND SURFACE, UON
4. WALL FINISH NOTED FOR DEMOLITION TO BE REMOVED BACK TO FACE OF STUD, UON
5. COORDINATE DEMOLITION SCOPE W/ MEP DRAWINGS FOR LOCATIONS OF (E) & (N)SYSTEM ELEMENTS
6. REFER TO ARCHITECTURAL GENERAL NOTES FOR ADDITIONAL DEMOLITION-SPECIFIC REQUIREMENTS
7. REMOVE (E) KEY CARD LOCKSET @ ALL UNIT ENTRY DOORS
8. DEMO ALL HEADBOARDS FROM (E) HOTEL ROOMS
9. ADD ALTERNATE #1: DEMO (E) LAUNDRY CHUTE

KEY NOTES

1. REMOVE BATHROOM PARTITIONS; SALVAGE CABINETRY, FIXTURES AND ACCESSORIES FOR REINSTALLATION IN RECONFIGURED BATHROOM;
2. REMOVE (E) CARPETING DOWN TO SUBFLOOR; SEE PROPOSED TO COORDINATE ON LIMITS OF REMOVAL WITHIN EACH RESIDENTIAL UNIT
3. LIMIT OF (E) CARPET REMOVAL
4. REMOVE (E) WET BAR CABINETRY, AND CORRIDOR SIDE WING WALL; SALVAGE (E) SINK & FAUCET FOR REINSTALLATION IN (N) COUNTER
5. NOT USED

GARAVAGLIA ARCHITECTURE INC.
582 MARKET STREET
SUITE 1800
SAN FRANCISCO, CA 94104
T: 415.391.9633
F: 415.391.9647
www.garavaglia.com

1628 WEBSTER STREET

ALAMEDA, CALIFORNIA

CONVERSION TO AFFORDABLE HOUSING

LICENSED ARCHITECT MICHAEL ALAN GARAVAGLIA No. C-14833 REN. 1/31/23 STATE OF CALIFORNIA

THIRD FLOOR PLAN

EXISTING / DEMO

PROJ. NO.	2023-024
SCALE	1/8"=1'-0"
DATE	17 MAR 2023
PHASE	SD
DRAWN	HA
CHECKED	AW

NO.	DATE	REVISION
	19 JUN 2023	RFP FOR CONSTRUCTION
	24 JUL 2023	PERMIT SUBMITTAL

SHEET NO.

A-2.03

ALL DRAWINGS AND WRITTEN MATERIAL APPEARING HEREIN CONSTITUTE ORIGINAL AND UNPUBLISHED WORK OF THE ARCHITECT AND MAY NOT BE DUPLICATED, USED, OR DISCLOSED WITHOUT WRITTEN CONSENT OF THE ARCHITECT. COPYRIGHT 2023 GARAVAGLIA ARCHITECTURE, INC.

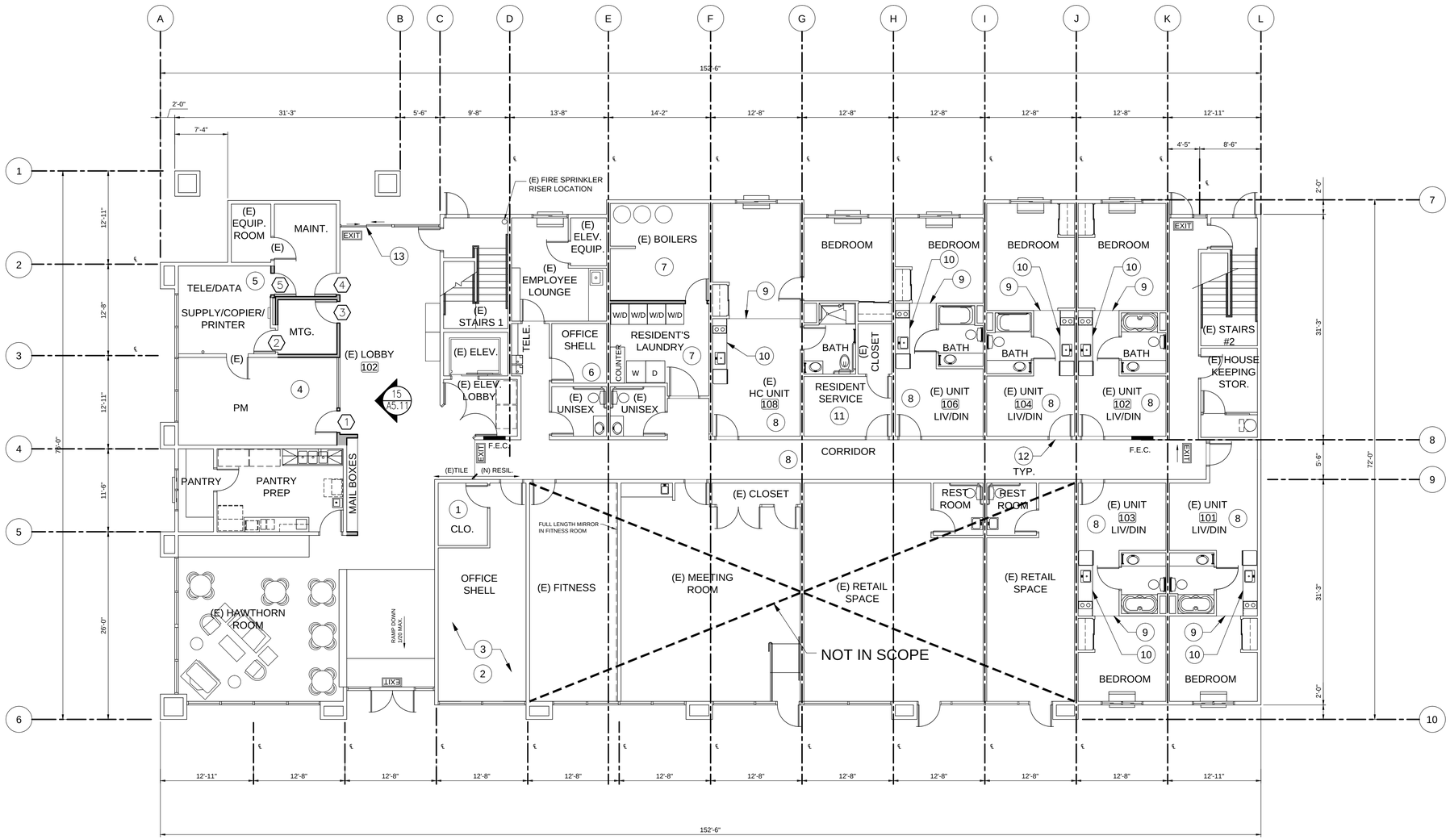

1 MAIN FLOOR PLAN

SCALE: 1/8" = 1'-0"

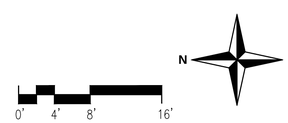

SHEET NOTES

1. PROTECT IN PLACE ALL EXISTING (E) ELEMENTS TO REMAIN, TO PREVENT DAMAGE OF ADJACENT AREAS DURING CONSTRUCTION WORK
2. BUILD WALLS, DOORWAYS AND WINDOW OPENINGS AS LOCATED
3. REPAIR (E) INTERIOR WALL FINISHES TO MATCH EXISTING, UON
4. REPAIR (E) CEILING FINISHES, TO MATCH EXISTING, UON
5. COORDINATE PROPOSED SCOPE OF WORK W/ ENGINEERING DRAWINGS FOR LOCATIONS OF BUILDING SYSTEM ELEMENTS
6. RESIDENT'S LAUNDRY APPLIANCES TO BE PROVIDED BY SERVICE PROVIDER
7. REPLACE (E) UNIT KEY CARD LOCK SETS w/ KEYED(N) LOCK SETS UNLESS (E) CAN BE RETROFITTED
8. VERIFY OR PROVIDE ACOUSTIC TREATMENT AT MEETING ROOM & RESIDENT SERVICES ROOM
9. (E) SOFFIT ALIGNED w/ BATHROOM TO BE MAINTAINED; PROTECT AND REPAIR AS NECESSARY FOR ANY DAMAGE INFLICTED DURING SCOPE OF WORK
10. ADD ALTERNATE #1: PATCH FLOOR, CEILING, & WALL AT LOCATION OF REMOVED LAUNDRY CHUTE TO MATCH ADJACENT MATERIAL & FINISH

KEY NOTES

1. PATCH WALL FINISH TO MAINTAIN ORIGINAL 1-HR AND ACOUSTIC RATINGS
2. FILL VOID OF REMOVED SPA AND INSTALL (N) CONC FLOOR SLAB TO MATCH AND ALIGN WITH ADJACENT (E)
3. (N) MEETING ROOM WALLS AND CEILING FINISH TO BE INSTALLED FOR ACOUSTIC PRIVACY
4. INSTALL (N) PARTITIONS TO MATCH 1-HR AND ACOUSTIC RATING OF (E)
5. COORDINATE w/ OWNER FOR WORK ON LOW VOLTAGE SYSTEMS
6. PATCH AND PAINT (E) WALLS TO MAINTAIN (E) 1-HR AND ACOUSTIC RATING
7. PATCH (E) WALLS AND CEILING TO MAINTAIN (E) 1-HR AND ACOUSTIC RATING; AND TO MATCH AND ALIGN w/ (E)
8. INSTALL (N) LVT RESILIENT FLOORING
9. PROVIDE MECHANICALLY FASTENED METAL TRANSITION STRIP
10. INSTALL NEW KITCHENETTE COUNTER OVER BASE CABINET w/ SINK AND ELEC 2 BURNER FLAT SURFACE COOK TOP w/ STORAGE CABINETS ABOVE, AND 24" REFRIGERATOR
11. PATCH WALLS TO MAINTAIN ORIGINAL 1-HR AND ACOUSTIC RATINGS; REPLACE (E) DOOR w/ (N) RATED DOOR WITH UPPER VISION PANEL
12. (N) THRESHOLD & SWEEP TO CLOSE GAP BELOW (E) DOOR
13. RE-INSTALL (E) SALVAGED SLIDING ALUMINUM STOREFRONT ENTRY DOOR ASSEMBLY AT EXTERIOR LOCATION

GARAVAGLIA ARCHITECTURE INC.

582 MARKET STREET
SUITE 1800
SAN FRANCISCO, CA 94104
T: 415.391.9633
F: 415.391.9647

www.garavaglia.com

1628 WEBSTER STREET

ALAMEDA, CALIFORNIA

CONVERSION TO AFFORDABLE HOUSING

LICENSED ARCHITECT
MICHAEL ALAN GARAVAGLIA
No. C-14833
REN. 1/31/23
STATE OF CALIFORNIA

MAIN FLOOR PLAN

PROPOSED

PROJ. NO.	2023-024
SCALE	1/8"=1'-0"
DATE	17 MAR 2023
PHASE	SD
DRAWN	HA
CHECKED	AW

NO.	DATE	REVISION
	19 JUN 2023	RFP FOR CONSTRUCTION
	24 JUL 2023	PERMIT SUBMITTAL

SHEET NO.

A-2.11

ALL DRAWINGS AND WRITTEN MATERIAL APPEARING HEREIN CONSTITUTE ORIGINAL AND UNPUBLISHED WORK OF THE ARCHITECT AND MAY NOT BE DUPLICATED, USED, OR DISCLOSED WITHOUT WRITTEN CONSENT OF THE ARCHITECT. COPYRIGHT 2023 GARAVAGLIA ARCHITECTURE, INC.

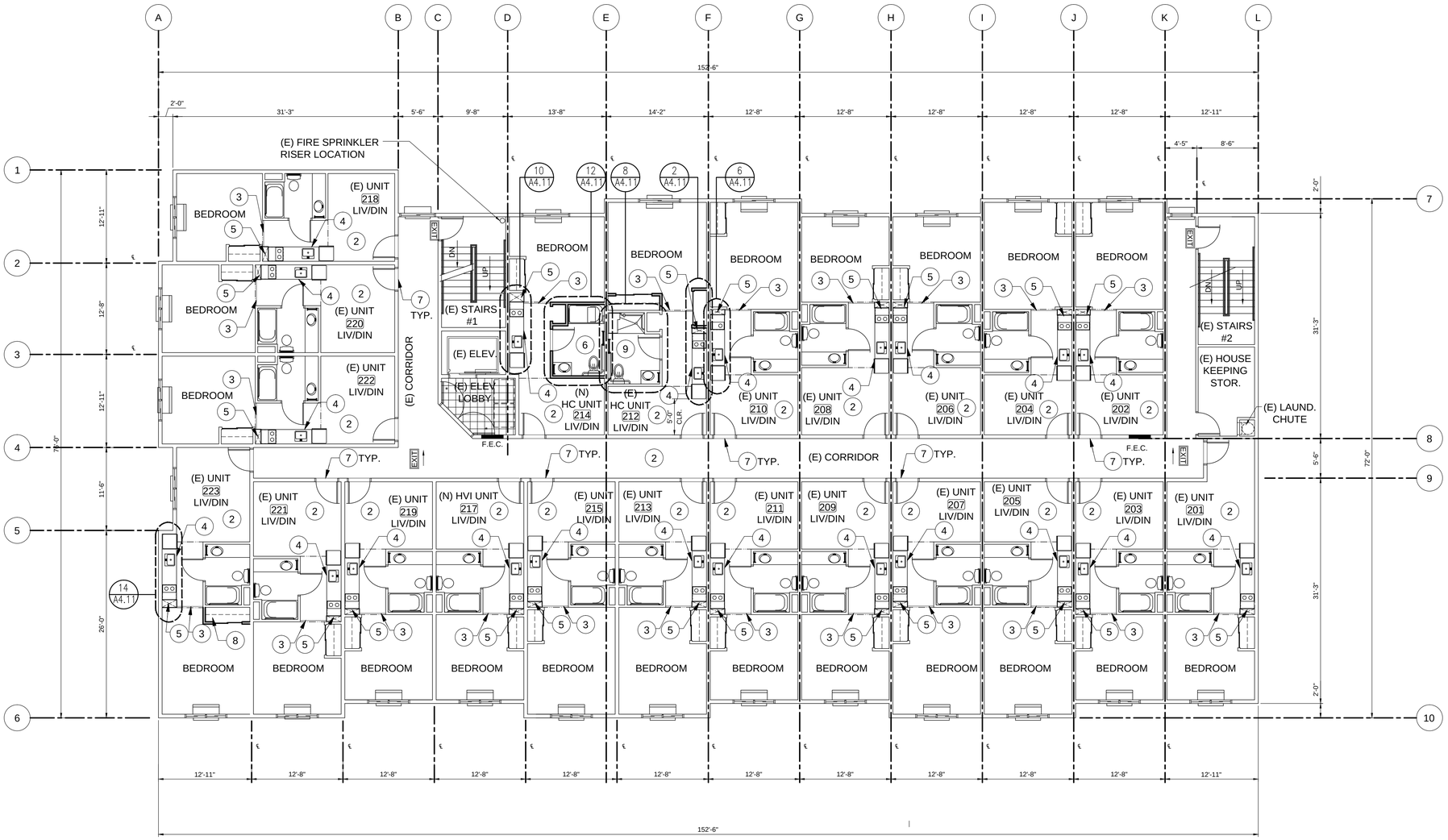

1 SECOND FLOOR PLAN

SCALE: 1/8" = 1'-0"

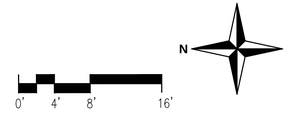

SHEET NOTES

1. PROTECT IN PLACE ALL EXISTING (E) ELEMENTS TO REMAIN, TO PREVENT DAMAGE OF ADJACENT AREAS DURING CONSTRUCTION WORK
2. BUILD WALLS, AND DOORWAYS AS LOCATED
3. REPAIR (E) INTERIOR WALL FINISHES TO MATCH EXISTING, UON
4. REPAIR (E) CEILING FINISHES, TO MATCH EXISTING, UON
5. COORDINATE PROPOSED SCOPE OF WORK W/ ENGINEERING DRAWINGS FOR LOCATIONS OF BUILDING SYSTEM ELEMENTS
6. (E) SOFFIT ALIGNED w/ BATHROOM TO BE MAINTAINED; PROTECT AND REPAIR AS NECESSARY FOR ANY DAMAGE INFLICTED DURING SCOPE OF WORK
7. REPLACE (E) UNIT KEY CARD LOCK SETS w/ (N) KEYED LOCK SET SUNLESS (E) CAN BE RETROFITTED
8. VERIFY OR PROVIDE ACOUSTIC TREATMENT AT MEETING ROOM & RESIDENT SERVICES ROOM
9. ADD ALTERNATE #1: PATCH FLOOR, CEILING, & WALL AT LOCATION OF REMOVED LAUNDRY CHUTE TO MATCH ADJACENT MATERIAL & FINISH

KEY NOTES

1. PATCH (E) WALLS AND CEILING TO MAINTAIN (E) 1-HR AND ACOUSTIC RATING;
2. INSTALL (N) LVT RESILIENT FLOORING
3. PROVIDE MECHANICALLY FASTENED METAL FLOORING TRANSITION STRIP
4. INSTALL NEW KITCHENETTE COUNTER OVER BASE CABINET w/ SALVAGED SINK& FAUCET, AND ELEC 2 BURNER FLAT SURFACE COOK TOP w/ STORAGE CABINETS ABOVE, AND 24" REFRIGERATOR
5. INSTALL (N) VENT CHASE FOR VENTILATION HOOD DUCTING
6. RECONFIGURE BATHROOM TO BE FULLY ACCESSIBLE; PATCH (E) WALLS & CEILING FINISH TO MATCH AND ALIGN w/ (E)
7. (N) THRESHOLD& SWEEP TO CLOSE GAP BELOW (E) DOOR
8. INSTALL (N) CLOSET
9. INSTALL (N) ROLL-IN SHOWER STALL

GARAVAGLIA ARCHITECTURE INC.
582 MARKET STREET
SUITE 1800
SAN FRANCISCO, CA 94104
T: 415.391.9633
F: 415.391.9647
www.garavaglia.com

1628 WEBSTER STREET

ALAMEDA, CALIFORNIA

CONVERSION TO AFFORDABLE HOUSING

LICENSED ARCHITECT
MICHAEL ALAN GARAVAGLIA
No. C-14833
REN. 1/31/23
STATE OF CALIFORNIA

SECOND FLOOR PLAN

PROPOSED

PROJ. NO.	2023-024
SCALE	1/8"=1'-0"
DATE	17 MAR 2023
PHASE	SD
DRAWN	HA
CHECKED	AW

NO.	DATE	REVISION
	19 JUN 2023	RFP FOR CONSTRUCTION
	24 JUL 2023	PERMIT SUBMITTAL

SHEET NO.

A-2.12

ALL DRAWINGS AND WRITTEN MATERIAL APPEARING HEREIN CONSTITUTE ORIGINAL AND UNPUBLISHED WORK OF THE ARCHITECT AND MAY NOT BE DUPLICATED, USED, OR DISCLOSED WITHOUT WRITTEN CONSENT OF THE ARCHITECT. COPYRIGHT 2023 GARAVAGLIA ARCHITECTURE, INC.

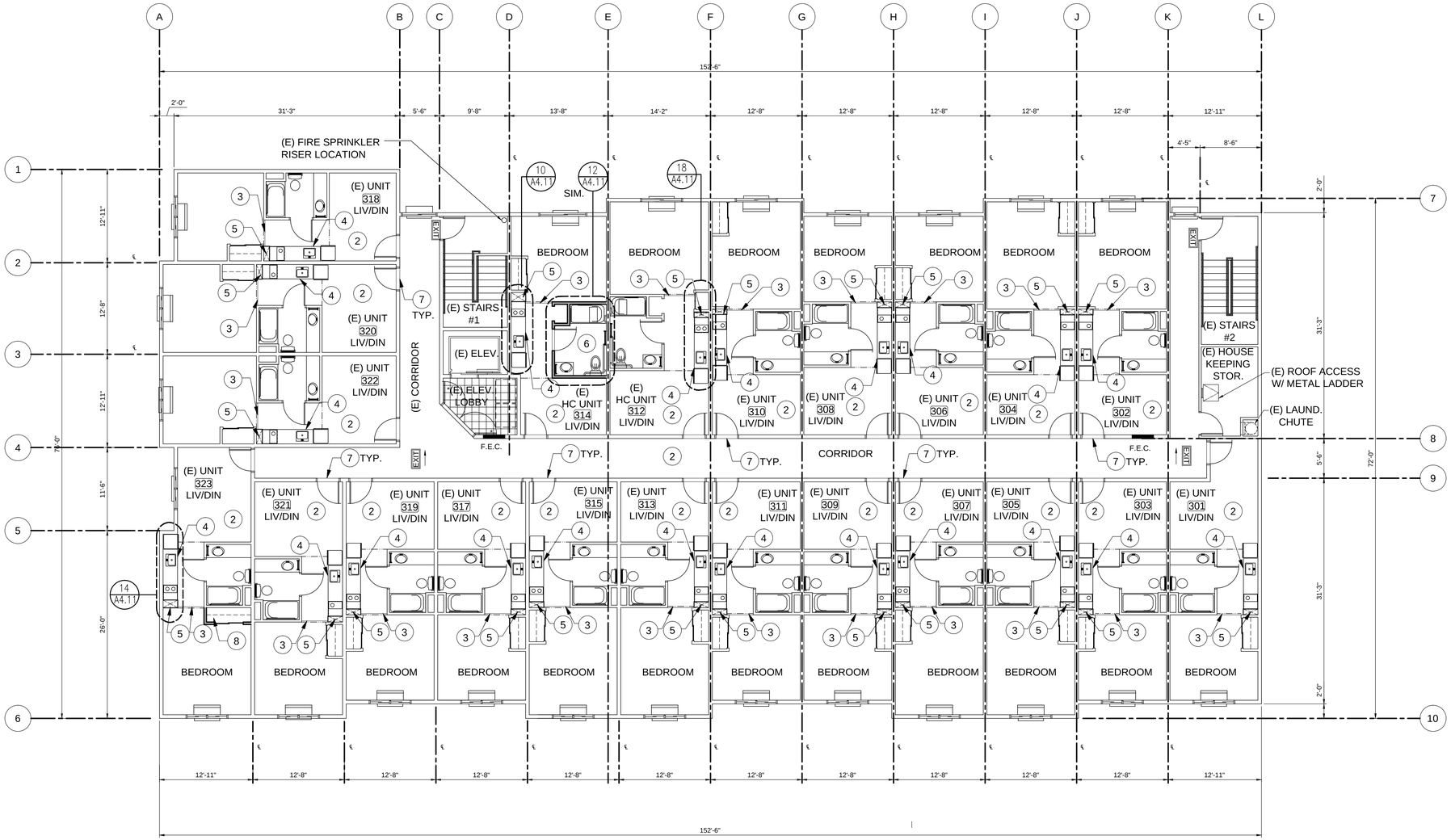

1 THIRD FLOOR PLAN

SCALE: 1/8" = 1'-0"

SHEET NOTES

1. PROTECT IN PLACE ALL EXISTING (E) ELEMENTS TO REMAIN, TO PREVENT DAMAGE OF ADJACENT AREAS DURING CONSTRUCTION WORK
2. BUILD WALLS, AND DOORWAYS AS LOCATED
3. REPAIR (E) INTERIOR WALL FINISHES TO MATCH EXISTING, UON
4. REPAIR (E) CEILING FINISHES, TO MATCH EXISTING, UON
5. COORDINATE PROPOSED SCOPE OF WORK W/ ENGINEERING DRAWINGS FOR LOCATIONS OF BUILDING SYSTEM ELEMENTS
6. NOT USED
7. REPLACE (E) KEY CARD LOCK SETS W/ KEY FOB LOCK SETS
8. VERIFY OR PROVIDE ACOUSTIC TREATMENT AT MEETING ROOM & RESIDENT SERVICES ROOM
9. ADD ALTERNATE #1: PATCH FLOOR, CEILING, & WALL AT LOCATION OF REMOVED LAUNDRY CHUTE TO MATCH ADJACENT MATERIAL & FINISH

KEY NOTES

1. PATCH (E) WALLS AND CEILING TO MAINTAIN (E) 1-HR AND ACOUSTIC RATING;
2. INSTALL (N) LVT RESILIENT FLOORING
3. PROVIDE MECHANICALLY FASTENED METAL FLOORING TRANSITION STRIP
4. INSTALL NEW KITCHENETTE COUNTER OVER BASE CABINET W/ SALVAGED SINK & FAUCET, AND ELEC 2 BURNER FLAT SURFACE COOK TOP W/ STORAGE CABINETS ABOVE, AND 24" REFRIGERATOR
5. INSTALL (N) VENT CHASE FOR VENTILATION HOOD DUCTING
6. RECONFIGURE BATHROOM TO BE FULLY ACCESSIBLE
7. (N) THRESHOLD& SWEEP TO CLOSE GAP BELOW (E) DOOR
8. INSTALL (N) CLOSET
9. NOT USED

GARAVAGLIA ARCHITECTURE INC.
582 MARKET STREET
SUITE 1800
SAN FRANCISCO, CA 94104
T: 415.391.9633
F: 415.391.9647
www.garavaglia.com

1628 WEBSTER STREET

ALAMEDA, CALIFORNIA

CONVERSION TO AFFORDABLE HOUSING

LICENSED ARCHITECT MICHAEL ALAN GARAVAGLIA No. C-14833 REN. 1/31/23 STATE OF CALIFORNIA

THIRD FLOOR PLAN

PROPOSED

PROJ. NO.	2023-024
SCALE	1/8"=1'-0"
DATE	17 MAR 2023
PHASE	SD
DRAWN	HA
CHECKED	AW

NO.	DATE	REVISION
	19 JUN 2023	RFP FOR CONSTRUCTION
	24 JUL 2023	PERMIT SUBMITTAL

SHEET NO.

A-2.13

ALL DRAWINGS AND WRITTEN MATERIAL APPEARING HEREIN CONSTITUTE ORIGINAL AND UNPUBLISHED WORK OF THE ARCHITECT AND MAY NOT BE DUPLICATED, USED, OR DISCLOSED WITHOUT WRITTEN CONSENT OF THE ARCHITECT. COPYRIGHT 2023 GARAVAGLIA ARCHITECTURE, INC.

NORTH ELEVATION
(PACIFIC AVENUE)

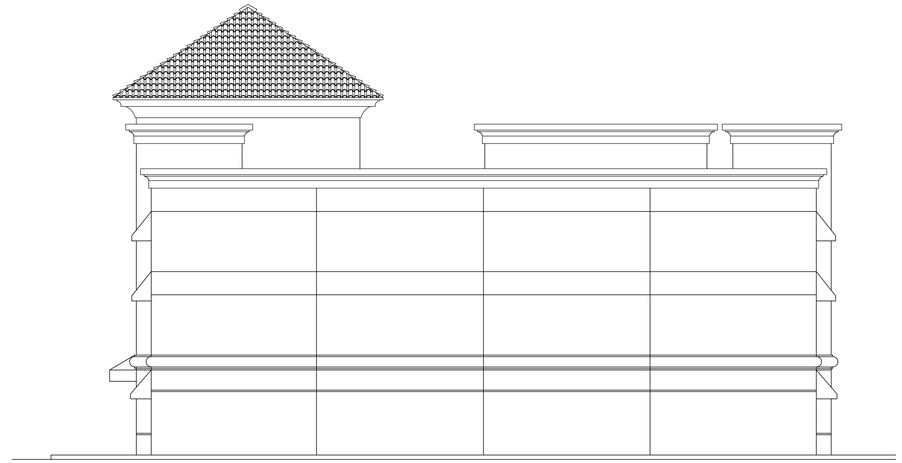

SOUTH ELEVATION

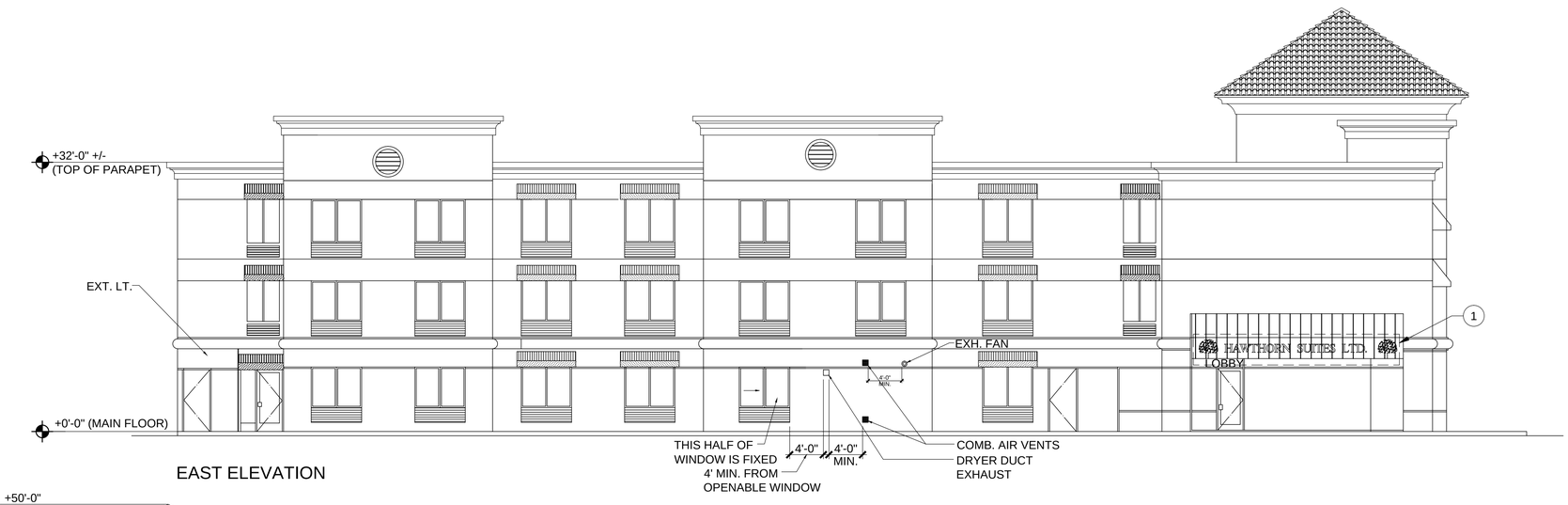

EAST ELEVATION

WEST ELEVATION
(WEBSTER STREET)

1 EXTERIOR ELEVATIONS
SCALE: 1/8" = 1'-0"

0' 4' 8' 16'

SHEET NOTES

1. PROTECT IN PLACE ALL EXISTING (E) ELEMENTS TO REMAIN, TO PREVENT DAMAGE OF ADJACENT AREAS DURING CONSTRUCTION WORK.
2. COORDINATE PROPOSED SCOPE OF WORK W/ ENGINEERING DRAWINGS FOR LOCATIONS OF (N) BUILDING SYSTEM ELEMENTS.
3. PREP & REPAINT EXTERIOR w/ 2 COLOR SCHEME; COLORS TO BE SELECTED

KEY NOTES

1 REMOVE (E) SIGNAGE AS NOTED

GARAVAGLIA ARCHITECTURE INC.
582 MARKET STREET
SUITE 1800
SAN FRANCISCO, CA 94104
T: 415.391.9633
F: 415.391.9647
www.garavaglia.com

1628 WEBSTER STREET
ALAMEDA, CALIFORNIA

CONVERSION TO
AFFORDABLE HOUSING

LICENSED ARCHITECT
MICHAEL ALAN WAGNER
No. C-14823
REN. 1/31/23
STATE OF CALIFORNIA

EXTERIOR ELEVATIONS
EXISTING

PROJ. NO.	2023-024
SCALE	3/32"=1'-0"
DATE	17 MAR 2023
PHASE	SD
DRAWN	HA
CHECKED	AW

NO.	DATE	REVISION
	19 JUN 2023	RFP FOR CONSTRUCTION
	24 JUL 2023	PERMIT SUBMITTAL

SHEET NO.
A-3.01

ALL DRAWINGS AND WRITTEN MATERIAL APPEARING HEREIN CONSTITUTE ORIGINAL AND UNPUBLISHED WORK OF THE ARCHITECT AND MAY NOT BE DUPLICATED, USED, OR DISCLOSED WITHOUT WRITTEN CONSENT OF THE ARCHITECT.
COPYRIGHT 2023 GARAVAGLIA ARCHITECTURE, INC.

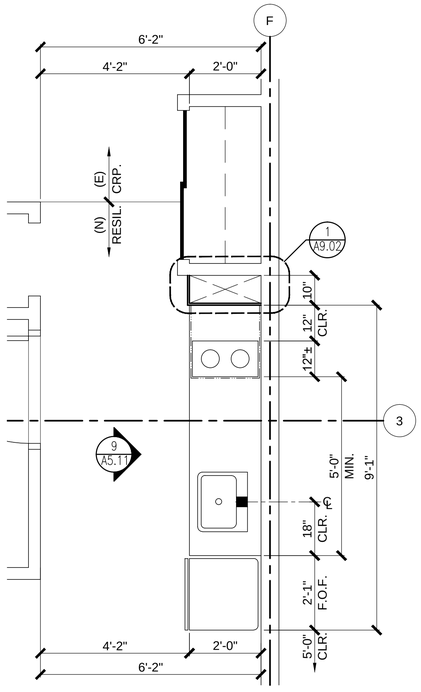

18 KITCHENETTE - A (UNIT 312)
SCALE: 1/2" = 1'-0"

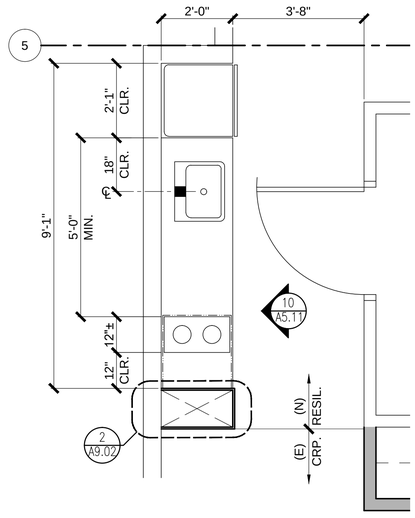

14 KITCHENETTE - D
SCALE: 1/2" = 1'-0"

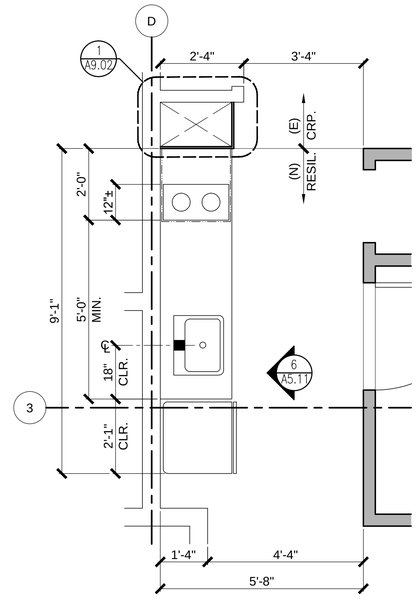

10 KITCHENETTE - C
SCALE: 1/2" = 1'-0"

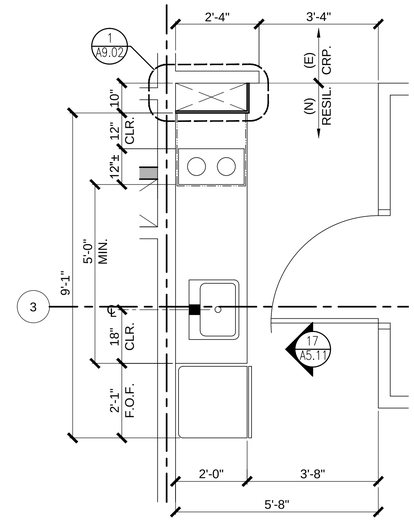

6 KITCHENETTE - B
SCALE: 1/2" = 1'-0"

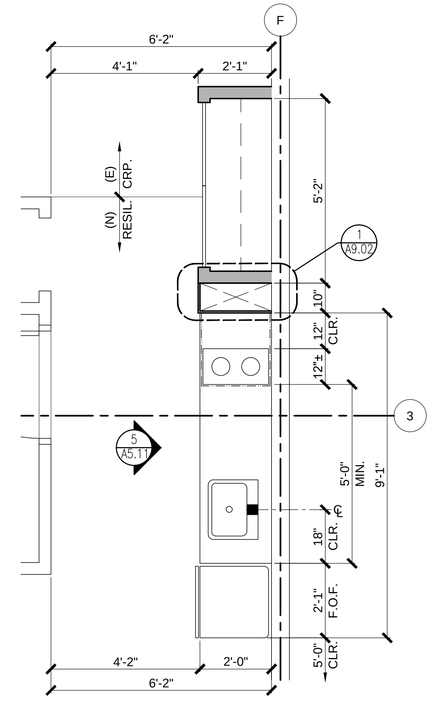

2 KITCHENETTE - A (UNIT 212)
SCALE: 1/2" = 1'-0"

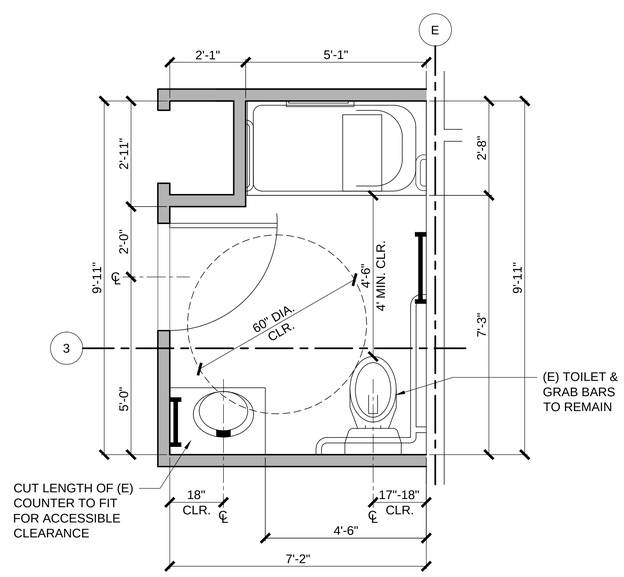

2 UNIT 214 ACCESSIBLE BATH (314 SIM)
SCALE: 1/2" = 1'-0"

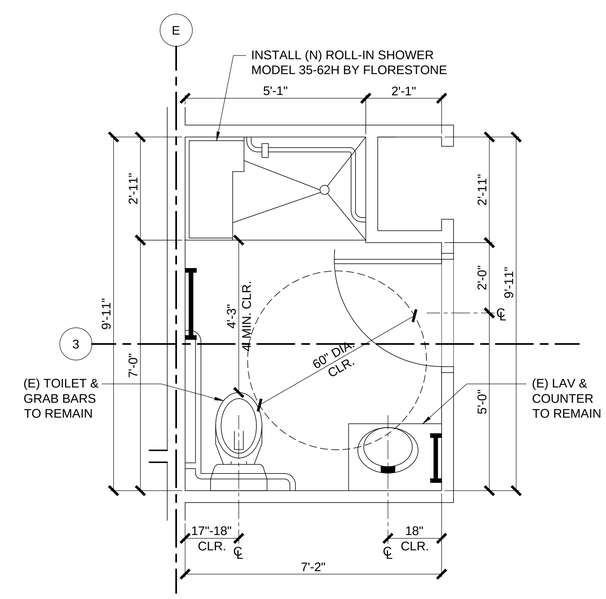

2 UNIT 212 ACCESSIBLE BATH
SCALE: 1/2" = 1'-0"

GARAVAGLIA ARCHITECTURE INC.
582 MARKET STREET
SUITE 1800
SAN FRANCISCO, CA 94104
T: 415.391.9633
F: 415.391.9647
www.garavaglia.com

1628 WEBSTER STREET
ALAMEDA, CALIFORNIA

CONVERSION TO AFFORDABLE HOUSING

LICENSED ARCHITECT
MICHAEL ALAN GARAVAGLIA
No. C-14833
REN. 1/31/23
STATE OF CALIFORNIA

PLANS
ENLARGED

PROJ. NO.	2023-024
SCALE	1/8"=1'-0"
DATE	17 MAR 2023
PHASE	SD
DRAWN	HA
CHECKED	AW

NO.	DATE	REVISION
	19 JUN 2023	RFP FOR CONSTRUCTION
	24 JUL 2023	PERMIT SUBMITTAL

SHEET NO.
A-4.11

ALL DRAWINGS AND WRITTEN MATERIAL APPEARING HEREIN CONSTITUTE ORIGINAL AND UNPUBLISHED WORK OF THE ARCHITECT AND MAY NOT BE DUPLICATED, USED, OR DISCLOSED WITHOUT WRITTEN CONSENT OF THE ARCHITECT. COPYRIGHT 2023 GARAVAGLIA ARCHITECTURE, INC.

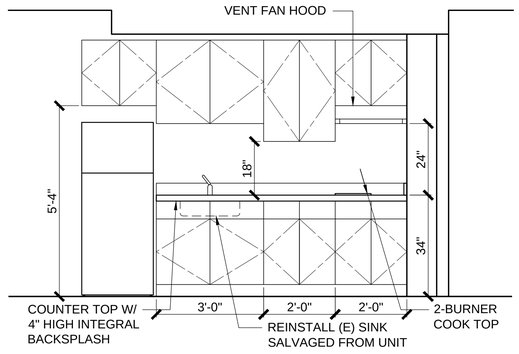

17 KITCHENETTE - B

SCALE: 1/2" = 1'-0"

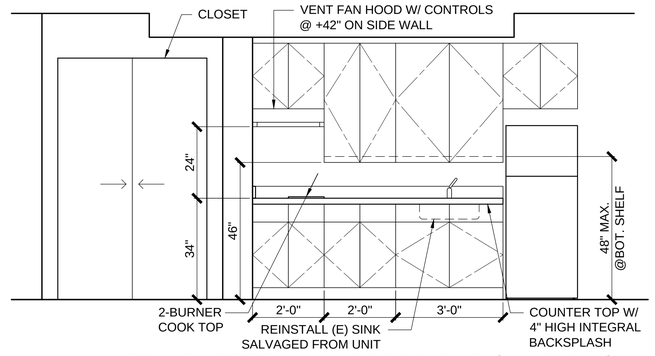

9 KITCHENETTE - A, ACCESSIBLE (UNIT 312)

SCALE: 1/2" = 1'-0"

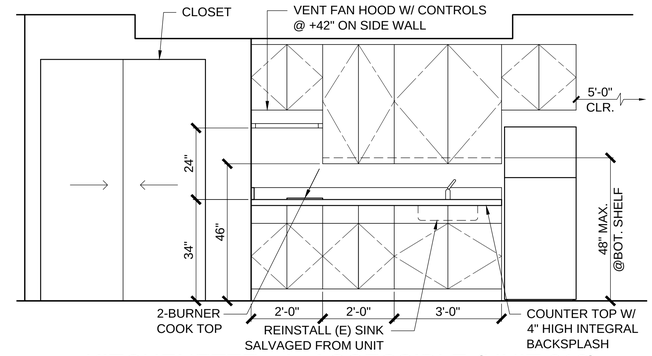

5 KITCHENETTE - A, ACCESSIBLE (UNIT 212)

SCALE: 1/2" = 1'-0"

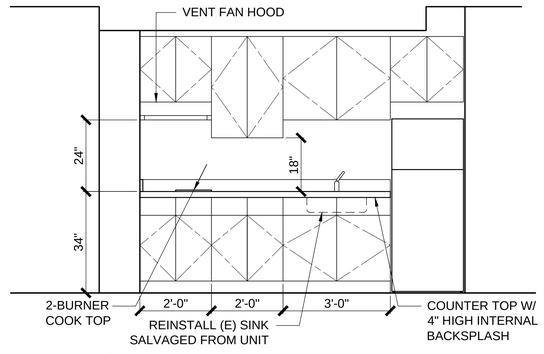

10 KITCHENETTE - D

SCALE: 1/2" = 1'-0"

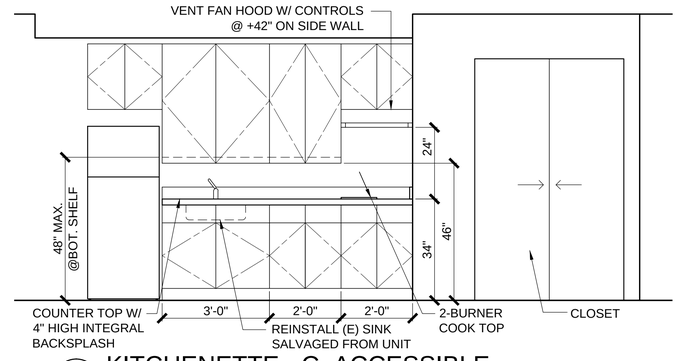

6 KITCHENETTE - C, ACCESSIBLE

SCALE: 1/2" = 1'-0"

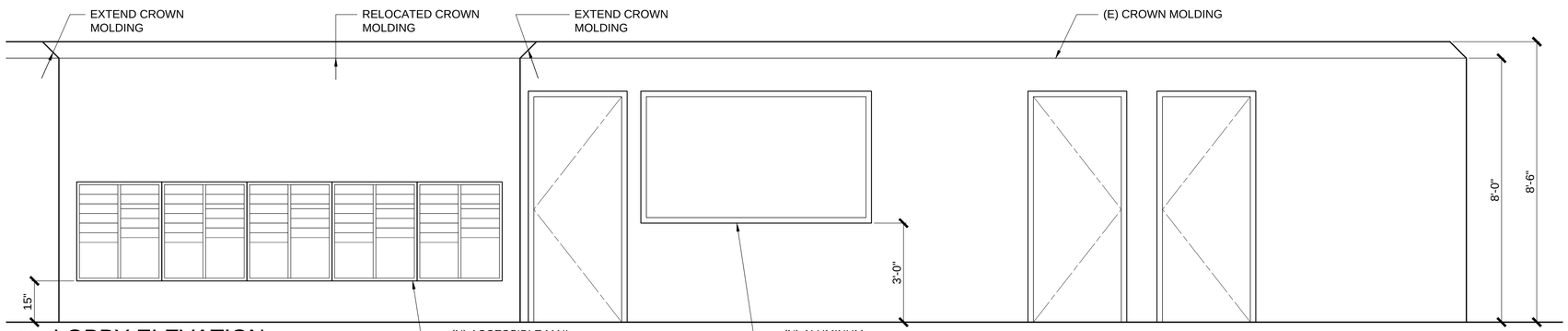

15 LOBBY ELEVATION

SCALE: 1/2" = 1'-0"

GARAVAGLIA ARCHITECTURE INC.
582 MARKET STREET
SUITE 1800
SAN FRANCISCO, CA 94104
T: 415.391.9633
F: 415.391.9647

www.garavaglia.com

1628 WEBSTER STREET

ALAMEDA, CALIFORNIA

CONVERSION TO
AFFORDABLE HOUSING

LICENSED ARCHITECT
MICHAEL ALAN GARAVAGLIA
No. C-14838
REN 1/31/23
STATE OF CALIFORNIA

ELEVATIONS

INTERIOR

PROJ. NO.	2023-024
SCALE	1/2"=1'-0"
DATE	17 MAR 2023
PHASE	SD
DRAWN	HA
CHECKED	AW

NO.	DATE	REVISION
	19 JUN 2023	RFP FOR CONSTRUCTION
	24 JUL 2023	PERMIT SUBMITTAL

SHEET NO.

A-5.11

ALL DRAWINGS AND WRITTEN MATERIAL APPEARING HEREIN CONSTITUTE ORIGINAL AND UNPUBLISHED WORK OF THE ARCHITECT AND MAY NOT BE DUPLICATED, USED, OR DISCLOSED WITHOUT WRITTEN CONSENT OF THE ARCHITECT. COPYRIGHT 2023 GARAVAGLIA ARCHITECTURE, INC.

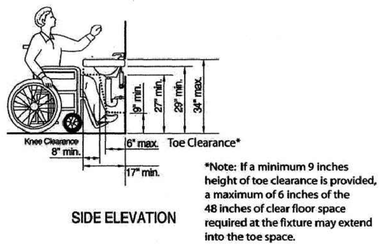

17 KNEE SPACE CLEARANCE
NO SCALE

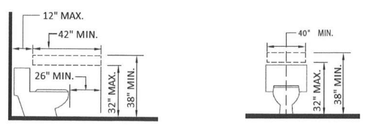

13 GRAB BAR SOLID BLOCKING
NO SCALE

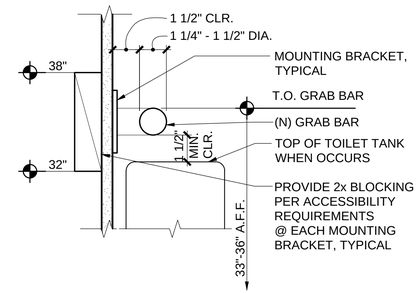

SEE 13/- FOR ADDITIONAL REQUIREMENTS

9 BLOCKING FOR GRAB BARS
SCALE: 3" = 1'-0"

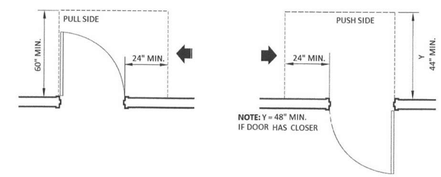

5 LATCH SIDE APPROACH
NO SCALE

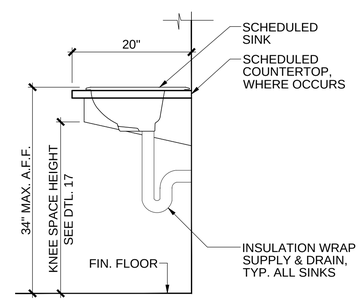

18 TYP. LAV.
NO SCALE

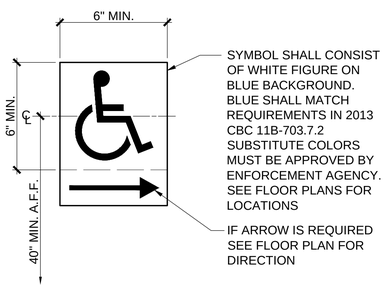

PATH OF ACCESSIBLE
14 TRAVEL SIGN
3" = 1'-0"

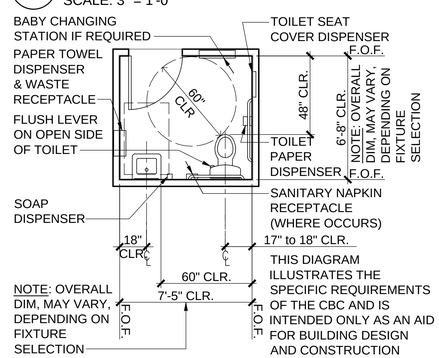

10 SINGLE ACCOM. TOILET
NO SCALE

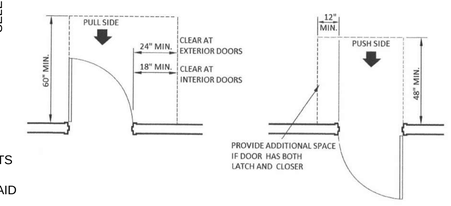

6 FRONT APPROACH
NO SCALE

SHEET NOTES

1. ALL CODE REFERENCES ARE TO 2016 CBC.

2. SEE FLOOR PLAN FOR LOCATIONS OF RESTROOM FIXTURES & ACCESSORIES.

3. SEE DETAIL 12 FOR TYPICAL SIGNAGE MOUNTING HEIGHTS.

4. SEE DETAIL 20 FOR TYPICAL ACCESSORY MOUNTING HEIGHTS.

5. SEE DTL. 19 FOR ACCESSORIES LEGEND.

6. SEE DTL. 10 FOR REQUIRED CODE CLEARANCES FOR A SINGLE ACCOMMODATION TOILET.

7. SEE PLUMBING DWGS./SPECS. FOR FIXTURES AND ARCH. SPECS. FOR ACCESSORIES, TYP.

8. PIPES - HOT WATER AND DRAIN PIPES SHALL BE INSULATED OR OTHERWISE COVERED. SEE DETAIL FOR REQUIRED KNEE AND TOE SPACE UNDER LAVATORIES AND SINKS.

9. CONTROLS AND SWITCHES - CONTROLS AT LAVATORIES, SHALL BE OPERABLE BY ONE HAND AND SHALL NOT REQUIRE TIGHT GRASPING, PINCHING OR TWISTING OF THE WRIST. FLUSH VALVES SHALL BE LOCATED 44" MAX. A.F.F.

10. GRAB BAR REINFORCEMENT SHALL BE INSTALLED PER DTL. 9 & DTL. 13.

11. OPERATING HANDLE MUST OPERATE WITH MAXIMUM 5# MAXIMUM OPERATING FORCE OR AUTOMATIC.

12. RIM OF URINAL TO EXTEND A MINIMUM OF 14" FROM FACE OF WALL.

13. ALL DISPENSERS 40" MAX TO HIGHEST OPERABLE PART OF ACCESSORY.

14. SLOPE FLOOR TOWARDS DRAIN MIN. 1/4" PER FOOT.

15. FLUSH CONTROLS SHALL BE LOCATED ON THE OPEN SIDE OF THE WATER CLOSET PER SEC 11B-604.6.

16. TYP. DIMS. SHOWN ARE PER CBC REQUIREMENTS & MAY NOT BE PROJECT SPECIFIC. CONTRACTOR SHALL VERIFY IN FIELD & ADVISE ARCHITECT RE DISCREPANCY BEFORE PROCEEDING W/ ANY AFFECTED WORK.

17. CONTRACTOR SHALL PREPARE & ISSUE A SUBMITTAL FOR ALL PLUMBING FIXTURES & ACCESSORIES. SUBMITTAL SHALL CLEARLY STATE ANY REQUESTED SUBSTITUTIONS, INCLUDING WHETHER ANY PRODUCT DIMENSIONS IN THE SUBMITTAL VARY FROM DIMS. SHOWN ON DRAWINGS. CONTRACTOR SHALL SUBMIT REVISED LAYOUT AND OBTAIN APPROVAL FOR SUBMITTAL BEFORE ORDERING ANY PRODUCTS.

GARAVAGLIA ARCHITECTURE INC.
582 MARKET STREET
SUITE 1800
SAN FRANCISCO, CA 94104
T: 415.391.9633
F: 415.391.9647
www.garavaglia.com

1628 WEBSTER STREET

ALAMEDA, CALIFORNIA

CONVERSION TO AFFORDABLE HOUSING

1. RECESSED TOWEL DISPENSER & RECEPTACLE
2. SOAP DISPENSER
3. MIRROR
4. TOILET PAPER DISPENSER
5. SANITARY NAPKIN RECEPTACLE
6. ROBE HOOK
7. BABY CHANGING STATION
8. UTILITY SHELF
9. SEAT COVER DISPENSER
10. RECESSED SANITARY NAPKIN DISPENSER
11. PARTITION MOUNTED SANITARY NAPKIN DISPOSAL, SEAT COVER & TOILET PAPER DISPENSER
12. SURFACE MTD. SEAT COVER DISPENSER, SANITARY NAPKIN DISPOSAL & TOILET PAPER DISPENSER
13. ELECTRIC HAND DRYER
14. SURFACE MOUNT WASTE RECEPTACLE

NOTE: "B-" NUMBERS ARE FOR BOBRICK PRODUCTS

19 ACCESSORIES LEGEND
SCALE: 1/4" = 1'-0"

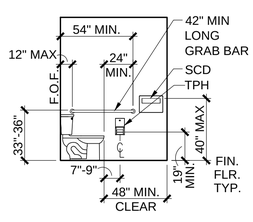

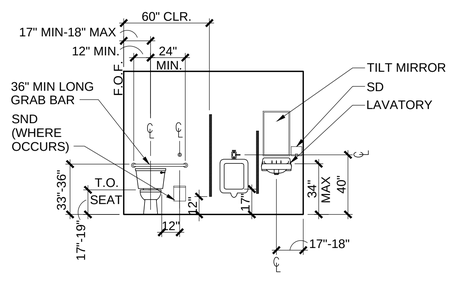

15 TYP. RESTROOM FIXTURE MOUNTING LOCATIONS
SCALE: 1/4" = 1'-0"

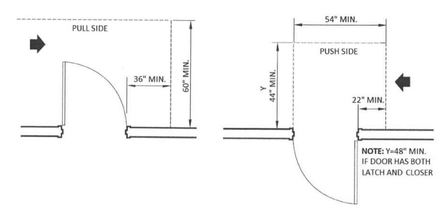

7 HINGE SIDE APPROACH
NO SCALE

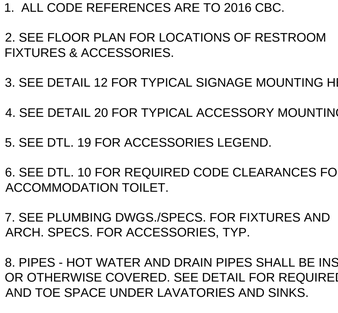

TYPICAL NOTES:

1. EACH 1/4" THICK SHAPE SHALL HAVE COLOR CONTRAST TO DOOR COLOR. UNISEX CIRCLE SHALL COLOR CONTRAST DOOR AND TRIANGLE

2. MOUNTED 60" A.F.F. TO THE CENTER OF THE SIGN AND CENTERED ON THE DOOR

3 SIGNAGE SYMBOLS
SCALE: 1 1/2" = 1'-0"

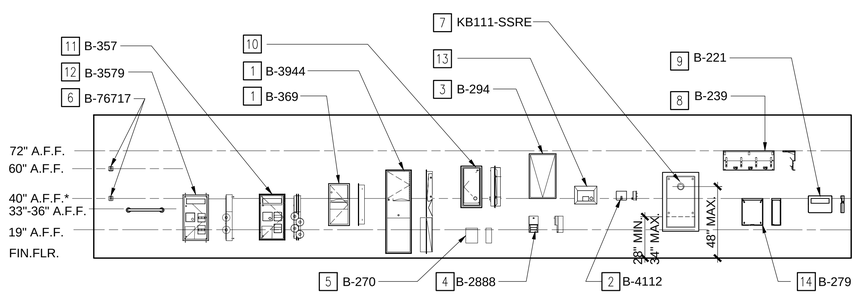

20 TYP. RESTROOM ACCESSORIES MOUNTING HEIGHTS
SCALE: 1/4" = 1'-0" SEE 19/- FOR LEGEND * OPERABLE PART SEE CBC SEC. 11B-309

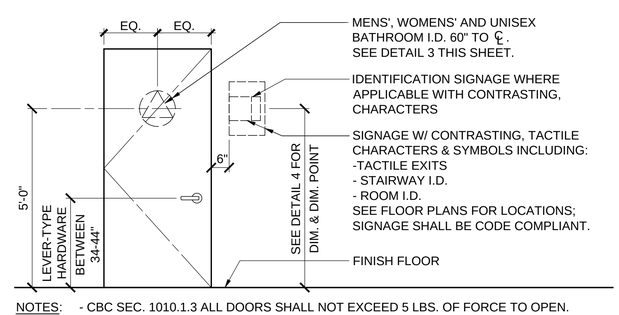

NOTES: - CBC SEC. 1010.1.3 ALL DOORS SHALL NOT EXCEED 5 LBS. OF FORCE TO OPEN.

12 MOUNTING LOCATIONS
SCALE: 1/2" = 1'-0"

MOUNT ON LATCH SIDE OF DOOR. 60" MAX. TO THE BASELINE OF HIGHEST LINE OF LETTERS; 48" MIN. A.F.F. TO LOWEST BRAILLE CELLS.

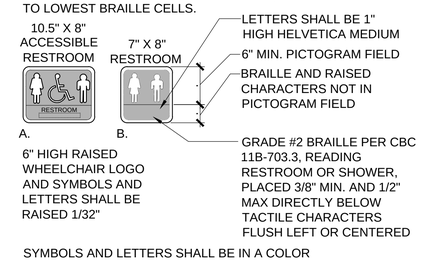

SYMBOLS AND LETTERS SHALL BE IN A COLOR CONSTRASTING WITH BACKGROUND AND RAISE 1/32"

4 TOILET ROOM SIGNAGE
SCALE: 1 1/2" = 1'-0"

LICENSED ARCHITECT MICHAEL ALAN GARAVAGLIA No. C-14838 REN. 1/31/23 STATE OF CALIFORNIA

ACCESSIBILITY DETAILS

PROJ. NO.	2023-024
SCALE	AS NOTED
DATE	17 MAR 2023
PHASE	SD
DRAWN	HA
CHECKED	AW

NO.	DATE	REVISION
	19 JUN 2023	RFP FOR CONSTRUCTION
	24 JUL 2023	PERMIT SUBMITTAL

SHEET NO.
A-9.01

ALL DRAWINGS AND WRITTEN MATERIAL APPEARING HEREIN CONSTITUTE ORIGINAL AND UNPUBLISHED WORK OF THE ARCHITECT AND MAY NOT BE DUPLICATED, USED, OR DISCLOSED WITHOUT WRITTEN CONSENT OF THE ARCHITECT. COPYRIGHT 2023 GARAVAGLIA ARCHITECTURE, INC.

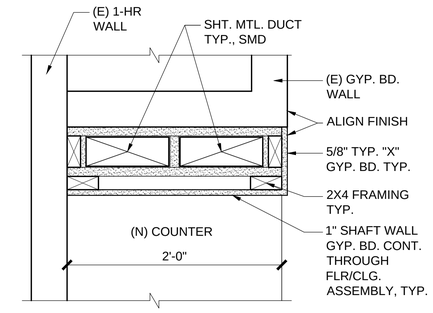

1 HOOD VENT DUCT SHAFTS

SCALE: 1/2" = 1'-0"

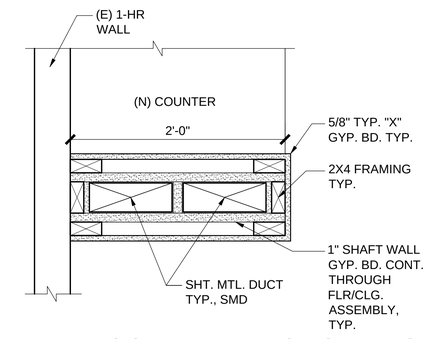

2 HOOD VENT DUCT SHAFTS

SCALE: 1-1/2" = 1'-0"

GARAVAGLIA ARCHITECTURE INC.

582 MARKET STREET
SUITE 1800
SAN FRANCISCO, CA 94104
T: 415.391.9633
F: 415.391.9647

www.garavaglia.com

1628 WEBSTER STREET

ALAMEDA, CALIFORNIA

CONVERSION TO AFFORDABLE HOUSING

DETAILS

INTERIOR

PROJ. NO.	2023-024
SCALE	AS NOTED
DATE	17 MAR 2023
PHASE	SD
DRAWN	HA
CHECKED	AW

NO.	DATE	REVISION
	19 JUN 2023	RFP FOR CONSTRUCTION
	24 JUL 2023	PERMIT SUBMITTAL

SHEET NO.

A-9.02

ALL DRAWINGS AND WRITTEN MATERIAL APPEARING HEREIN CONSTITUTE ORIGINAL AND UNPUBLISHED WORK OF THE ARCHITECT AND MAY NOT BE DUPLICATED, USED, OR DISCLOSED WITHOUT WRITTEN CONSENT OF THE ARCHITECT. COPYRIGHT 2023 GARAVAGLIA ARCHITECTURE, INC.

GENERAL MECHANICAL NOTES

1. ALL WORK SHALL COMPLY WITH THE REQUIREMENTS OF TITLE 24 OF THE CALIFORNIA CODE OF REGULATIONS (C.C.R.), 2022 CMC.
2. ALL SYSTEMS SHALL BE INSTALLED IN STRICT ACCORDANCE WITH ALL APPLICABLE CITY, COUNTY, FEDERAL AND STATE CODES AND ORDINANCES, AND SHALL MEET ALL REQUIREMENTS OF ALL AUTHORITIES HAVING JURISDICTION.
3. SYSTEM LAYOUTS AS INDICATED ON DRAWINGS ARE GENERALLY DIAGRAMMATIC BUT SHALL BE FOLLOWED AS CLOSELY AS ACTUAL CONSTRUCTION WILL PERMIT.
4. PRIOR TO SUBMISSION OF BID, REVIEW FULL SET OF NEW CONSTRUCTION DRAWINGS (INCLUDING ALL OTHER TRADES). INCLUDE ANY ADDITIONAL PIPE OR DUCT OFF-SETS THAT ARE NOT CURRENTLY SHOWN ON DRAWINGS BUT MAY BE REQUIRED TO CLEAR STRUCTURE, FINISHES OR WORK OF OTHER TRADES. NO EXTRA PAYMENT WILL BE ALLOWED FOR WORK RESULTING FROM LACK OF PROPER INITIAL APPRAISAL OF ENTIRE SCOPE OF WORK. SUBMIT REQUESTS FOR INFORMATIONS (RFIS) AS REQUIRED TO ANSWER ANY QUESTIONS THAT MAY ARISE DURING BIDDING PHASE. CLEARLY INDICATE SCOPE INCLUSION AND EXCLUSION IN BID.
5. FURNISH ALL LABOR, MATERIALS, TRANSPORTATION, AND PERFORM ALL REQUIRED OPERATIONS TO PROVIDE COMPLETE AND OPERABLE MECHANICAL SYSTEM, IN ACCORDANCE WITH THE FULL INTENT AND MEANING OF THE DRAWINGS AND SPECIFICATIONS AND PER STANDARD TRADE PRACTICES.
6. WORKMANSHIP SHALL BE FIRST CLASS THROUGHOUT AND PERFORMED ONLY BY COMPETENT AND EXPERIENCED WORKMEN IN A MANNER SATISFACTORY TO THE OWNER AND ARCHITECT.
7. ALL EQUIPMENT SHALL BE INSTALLED WITH SUFFICIENT ACCESS TO CONTROLS, FILTERS, ELECTRIC MOTORS, ETC. CONTRACTOR SHALL PROVIDE ACCESS PANELS WHERE REQUIRED.
8. COORDINATE ACCESS TO ALL DAMPERS, VALVES, AND OTHER SERVICEABLE EQUIPMENT.
9. PROVIDE BIRD SCREENS AT ALL INTAKE AND EXHAUST OPENINGS EXCEPT DRYER EXHAUST.
10. FLASH AND COUNTER FLASH ALL ROOF PENETRATIONS AS REQUIRED TO SEAL WEATHER TIGHT. (SEE ARCHITECTURAL ROOFING DETAILS AND SPECIFICATIONS).
11. PROVIDE UL-LISTED/APPROVED THROUGH PENETRATION FIRE-STOPPING AT ALL DUCT, PIPE AND CONDUIT PENETRATIONS OF FIRE-RATED WALLS, FLOORS, CEILING/FLOOR OR CEILING/ROOF ASSEMBLIES AND SHAFTS COMPLIANT WITH CHAPTER 7 OF THE 2022 CALIFORNIA BUILDING CODE.
12. LIMITING TRANSMISSION OF NOISE AND VIBRATIONS IS EXTREMELY IMPORTANT. CONTRACTOR TO PAY PARTICULAR ATTENTION THAT PIPING, EQUIPMENT, AND DUCTWORK ARE INSTALLED SO AS NOT TO CHATTER OR RUB AGAINST OTHER MATERIALS, EQUIPMENT OR BUILDING STRUCTURE. PROVIDE ISOMODE PADS, INSULATION OR OTHER SUITABLE MATERIALS TO AVOID DIRECT CONTACT AND NOISY CONDITIONS. SUFFICIENT CLEARANCES OF PIPING AND ITS ASSOCIATED COMPONENTS SHALL BE PROVIDED FROM ADJACENT JOIST, STUDS, BEAMS, COLUMNS DRYWALL, ETC. TO ALLOW FOR PIPE MOVEMENT DUE TO THERMAL EXPANSION AND STILL NOT COME IN CONTACT WITH STRUCTURE. INSULATION SHALL BE CONTINUOUS THROUGH PIPE HANGERS (PROVIDE SHEET METAL INSULATION SHIELD AT EACH HANGER).
13. WHERE JOIST, STUD OR BEAM PENETRATIONS ARE REQUIRED, SIZE TO PROVIDE ADEQUATE CLEARANCE FROM PIPE BUT DO NOT SIZE FOR INSULATION. PROVIDE "ACCOUSTO-PLUMB" ISOLATORS AT EACH SUCH PIPE PENETRATION AND BUTT ENDS OF INSULATION TIGHT AGAINST FRAMING TO ELIMINATE ANY CONNECTIVE HEAT LOSS. REVIEW ALL SUCH PENETRATIONS WITH ARCHITECT AND GENERAL CONTRACTOR BEFORE DRILLING OR NOTCHING. SEE STRUCTURAL DRAWINGS FOR CRITERIA ON JOIST PENETRATIONS - VERIFY WITH GENERAL CONTRACTOR.
14. PROVIDE DIELECTRIC INSULATING CONNECTIONS BETWEEN ALL DISSIMILAR METALS.
15. NOTIFY ARCHITECT AND GENERAL CONTRACTOR 48 HOURS IN ADVANCE BEFORE ANY TESTING.
16. PROVIDE DUCT AND PIPE INSULATION AND THERMOSTATS PER TITLE 24 REQUIREMENTS AND SPECIFICATIONS.
17. PER CALIFORNIA GREEN BUILDING STANDARDS CODE (PART 11 OF TITLE 24, CALIFORNIA CODE OF REGULATIONS):
    A. PROTECT DUCT OPENINGS AND MECHANICAL EQUIPMENT DURING CONSTRUCTION.
    B. LIMIT USE OF PERMANENT HVAC DURING CONSTRUCTION TO CONDITIONING NECESSARY FOR MATERIAL AND EQUIPMENT INSTALLATION. IF PERMANENT HVAC IS USED DURING CONSTRUCTION, INSTALL MERV-8 FILTERS ON RETURNS, AND REPLACE ALL FILTERS IMMEDIATELY PRIOR TO OCCUPANCY, OR, IF THE BUILDING IS OCCUPIED DURING ALTERATION, AT THE CONCLUSION OF CONSTRUCTION.
    C. PROVIDE AT LEAST MERV-13 FILTERS IN AIR HANDLERS CONDITIONING REGULARLY OCCUPIED SPACES OF MECHANICALLY VENTILATED BUILDINGS.
    D. DO NOT INSTALL EQUIPMENT THAT CONTAINS CFCS OR HALONS.
    E. PROVIDE THE BUILDING OWNER OR REPRESENTATIVE WITH DETAILED OPERATING AND MAINTENANCE INSTRUCTIONS AND COPIES OF GUARANTIES/WARRANTIES FOR EACH SYSTEM. O & M INSTRUCTIONS SHALL BE CONSISTENT WITH OSHA REQUIREMENTS IN CCR, TITLE 8, SECTION 5142, AND OTHER RELATED REGULATIONS.
18. ENVIRONMENTAL CONTROLS IN ANY MOBILITY UNITS SHALL NOT REQUIRE GRASPING OR TWISTING OF THE WRIST TO OPERATE.
19. ALL EXHAUST FAN DISCHARGES SHALL BE MINIMUM 3'-0" FROM ANY OPENINGS INTO THE BUILDING.
20. ALL EXHAUST FAN DISCHARGES SHALL BE MINIMUM 10'-0" FROM A FORCED AIR INLET.
21. COMPLY WITH CHAPTER 7 & 7A OF 2022 CBC.
22. COORDINATE WITH ELECTRICAL DRAWINGS FOR POWER AND WIRING INFORMATION.

SYMBOLS (NOT ALL USED)

SYMBOL	ABBR	DESCRIPTION
1 / M-1		DETAIL NUMBER / DRAWING NUMBER
1 / M-1		SECTION NUMBER / DRAWING NUMBER
AC / 1		EQUIPMENT TYPE / UNIT NUMBER
A XXX FD 12x12		SYMBOL AIR QUANTITY / NECK SIZE (4-WAY UON)
		CEILING SUPPLY DIFFUSER/REGISTER
		CEILING RETURN GRILLE/REGISTER
		CEILING EXHAUST GRILLE/REGISTER
		WALL SUPPLY GRILLE/REGISTER
		WALL RETURN OR EXHAUST GRILLE/REGISTER
		EXHAUST AIR DUCT RISER/DROP
(D)	R or D	SLOPED DUCT (RISE OR DROP)
FD	FD	FIRE DAMPER
FS	FS	FIRE-SMOKE DAMPER
	VD	VOLUME DAMPER
	BDD	BACK DRAFT DAMPER
		FLEXIBLE DUCT
T	T-STAT	THERMOSTAT (MOUNT AT 48" AFF)
#		MECHANICAL SHEET NOTE
CO2		CO2 SENSOR
		DIRECTION OF SLOPE
		DIRECTION OF FLOW

MECHANICAL CODE INTERPRETATIONS

ALTERATIONS TO EXISTING MULTIFAMILY BUILDINGS DO NOT REQUIRE COMPLIANCE WITH CURRENT VENTILATION CODE REQUIREMENTS. *CEC 2022 BUILDING ENERGY EFFICIENCY STANDARDS SECTION 180.0*

THE EXISTING PTHP UNITS OR INCIDENTAL EQUAL REPLACEMENT UNITS DO NOT REQUIRE SETBACK THERMOSTATS. *CEC 2022 BUILDING ENERGY EFFICIENCY STANDARDS SECTION 110.2(c).*

NO FILTERED OUTDOOR AIR IS REQUIRED IN APARTMENTS BECAUSE THERE ARE NO DUCTED SUPPLY/RECIRCULATION AIR SYSTEMS IN THE DWELLING UNITS *CEC 2022 BUILDING ENERGY EFFICIENCY STANDARDS SECTION 160.1.A*

THE EXISTING BATHROOM ROOFTOP EXHAUST FANS PROVIDE EXHAUST VENTILATION IN THE APARTMENTS. FLOW RATE IS 50CFM MINIMUM. *CEC 2022 BUILDING ENERGY EFFICIENCY STANDARDS SECTION 160.2(c)4. AND TABLE 160.2-C.*

THE COMMON AREA PTHP UNITS DO NOT REQUIRE SET BACK THERMOSTATS. *CEC 2022 BUILDING ENERGY EFFICIENCY STANDARDS SECTION 160.3(a)2 EXCEPTION.*

UNIT SEPARATIONS FOR KITCHEN HOOD EXAUST RISERS THAT DO NOT REQUIRE FIRE DAMPERS:
1 HOUR ENCLOSED SHAFT TO ROOF DECK, ENDING AT SHEATHING. PER *2022 CBC 713.12.1.TABLE 601* FOR TYPE V-B.
1 HOUR ENCLOSED SHAFT TO ROOF DECK, OPEN AT BOTTOM. PER *2022 CBC 713.11.2.EXCEPTION 3.713.12.1.TABLE 601* FOR TYPE V-B.

MECHANICAL SCHEDULE

EXHAUST FAN

SYMBOL	MANUFACTURER /MODEL	CONFIG	SERVING	FAN CFM	FAN ESP	FAN HP/ WATTS	ELECTRICAL VOLT	ELECTRICAL PHASE	ELECTRICAL FLA	ELECTRICAL MOCP	ELECTRICAL DRIVE	WEIGHT (LBS)	CONTROL	NOISE (SONES)	NOTES
EF-1	PANASONIC FV-05-11VKL2	CEILING RECESSED	RESIDENT'S LAUNDRY	50	0.1	32W	120	1	0.2	15	DIRECT	12	HUMIDI-STAT	0.3	
EF-2	PANASONIC FV-05-11VK2	CEILING RECESSED	EMPLOYEE LOUNGE	50	0.1	32W	120	1	0.2	15	DIRECT	12	WALL SWITCH	0.3	
KRH-1	SUMMIT H24RSS	UNDER CABINET	KITCHEN RANGE	150	0.1		120			15		11	MANUAL SWITCH		1

NOTES
1 MOBILITY UNITS REQUIRE COUNTER-FRONT TOGGLE SWITCH CONTROL FOR KRH.

SCOPE OF WORK

- EXISTING HVAC SYSTEMS TO REMAIN IN PLACE.
- SERVICE EXISTING HEAT PUMP AND FAN SYSTEMS THROUGHOUT. CLEAN COILS AND DUCTS, STRAIGHTEN FINS AND REPLACE FILTERS AND BELTS. IDENTIFY DEFICIENCIES AND RECOMMEND CORRECTION OR REPLACEMENT IN-KIND FOR EQUIPMENT.
- BALANCE BATHROOM EXHAUST FAN SYSTEM AIR FLOWS.
- REMOVE EXISTING LAUNDRY ROOM EQUIPMENT AND DRYER EXHAUST DUCT WORK.
- PROVIDE AND INSTALL NEW LAUNDRY ROOM DRYER EXHAUST DUCTWORK TO BUILDING EXTERIOR WITH NEW TERMINATIONS.
- PROVIDE AND INSTALL NEW RANGE HOODS IN APARTMENTS WITH NEW PROTECTED DUCT WORK TO ROOF IN RATED ENCLOSURES. PROVIDE AND INSTALL NEW WATERPROOFED ROOF TERMINATIONS.

TITLE 24 REQUIREMENTS

- THERE ARE NO CHANGES REQUIRING MECHANICAL TITLE 24 FORMS.

APPLICABLE CODES

1. 2022 BUILDING STANDARD ADMINISTRATIVE CODE, PART 1, TITLE 24 C.C.R.
2. 2022 CALIFORNIA BUILDING CODE (CBC), PART 2, TITLE 24 C.C.R.
3. 2022 CALIFORNIA ELECTRICAL CODE (CEC), PART 3, TITLE 24 C.C.R.
4. 2022 CALIFORNIA MECHANICAL CODE (CMC), PART 4, TITLE 24 C.C.R.
5. 2022 CALIFORNIA PLUMBING CODE (CPC), PART 5, TITLE 24 C.C.R.
6. 2022 CALIFORNIA ENERGY CODE, PART 6, TITLE 24 C.C.R.
7. 2022 CALIFORNIA FIRE CODE (CFC), PART 9, TITLE 24, C.C.R.
9. 2022 CALIFORNIA EXISTING BUILDING CODE, PART 10, TITLE 24 C.C.R.
10. 2022 CALIFORNIA "GREEN" BUILDING REQUIREMENTS, PART 11, TITLE 24 C.C.R.
11. 2022 CALIFORNIA REFERENCED STANDARDS CODE, PART 12, TITLE 24, C.C.R.
12. TITLE 19, C.C.R., PUBLIC SAFETY, STATE FIRE MARSHAL REGULATIONS

NFPA 13, AUTOMATIC SPRINKLER SYSTEM, 2022 EDITION
NFPA 14, STANDPIPE AND HOSE SYSTEMS, 2022 EDITION
NFPA 72, NATIONAL FIRE ALARM CODE, 2022 EDITION
LOCAL MUNICIPAL BUILDING CODES

ABBREVIATIONS

(E)	EXISTING TO REMAIN	FC	FAN COIL	PB	PULL BOX
(F)	FUTURE	FSD	FIRE SMOKE DAMPER	PH, ϕ	PHASE
(N)	NEW	G	GROUNDING CONDUCTOR	PNL	PANEL
(RR)	REMOVE AND RELOCATE	GFI	GROUND FAULT INTERRUPTER	POS	POINT OF SALE
A	AMPERE	GFCI	GROUND FAULT CIRCUIT INTERRUPTER	RSC	RIGID STEEL CONDUIT
AC	ALTERNATING CURRENT	GND	GROUND	S.A.D.	SEE ARCHITECTURAL DRAWINGS
ADA	AMERICANS WITH DISABILITIES ACT	HP	HORSEPOWER	S.A.V.D.	SEE AUDIO/VISUAL DRAWINGS
AF	AMPERE RATING OF FUSE	HVI	HEARING AND VISUALLY IMPAIRED	S.C.D.	SEE CIVIL DRAWINGS
AFCI	ARC FAULT CIRCUIT INTERRUPTER	IWH	INSTANT WATER HEATER	S.L.D.	SEE LANDSCAPE DRAWINGS
AFF	ABOVE FINISHED FLOOR	JB	JUNCTION BOX	S.L.D.G.	SINGLE LINE DIAGRAM
AFG	ABOVE FINISHED GRADE	kVA	KILOVOLT AMPS	S.M.D.	SEE MECHANICAL DRAWINGS
AV	AUDIO/VISUAL	kW	KILOWATTS	S.P.D.	SEE PLUMBING DRAWINGS
BS	BRANCH SELECTOR	LC	LOAD CENTER	SLD	SINGLE LINE DIAGRAM
C	CONDUIT	LF	LOW FREQUENCY	SPEC	SPECIFICATION
CKT	CIRCUIT	LTG	LIGHTING	T	TELEPHONE
CO	CARBON MONOXIDE	LTS	LIGHTS	TYP	TYPICAL
CU	CONDENSING UNIT	LV	LOW VOLTAGE	TV	TELEVISION
D/G	DISHWASHER AND GARBAGE DISPOSAL	MC	MEDIA CABINET	UG	UNDERGROUND
D	DEDICATED	MECH	MECHANICAL	UAC	UNDER ANOTHER CONTRACT
DIM	DIMMABLE	MTD	MOUNTED	UON	UNLESS OTHERWISE NOTED
EC	ELECTRICAL CONTRACTOR	MV	MEDIUM VOLTAGE	V	VOLT
EF	EXHAUST FAN	N	NEUTRAL	VP	VANDAL PROOF
ELEC	ELECTRICAL	N.E.C.	NATIONAL ELECTRICAL CODE	VS	VACANCY SENSOR
EM	EMERGENCY	NEMA	NATIONAL ELECTRICAL MANUFACTURERS ASSOCIATION	VSD	VACANCY SENSOR WITH DIMMER
EMT	ELECTRICAL METALLIC TUBING			W	WATTS
ENT	ELECTRICAL NONMETALLIC TUBING	NEUT	NEUTRAL	WAP	WIRELESS ACCESS POINT
EV	ELECTRIC VEHICLE	NIC	NOT IN CONTRACT	WP	WEATHERPROOF (NEMA 3R)
EVSE	ELECTRIC VEHICLE SUPPLIED EQUIPMENT	NTS	NOT TO SCALE	WT	WATERTIGHT
F/I	FURNISH AND INSTALL	OS	OCCUPANCY SENSOR	XFMR	TRANSFORMER
FACP	FIRE ALARM CONTROL PANEL	OSD	OCCUPANCY SENSOR WITH DIMMER		
FATC	FIRE ALARM TERMINAL CAN	P	POLE		

SHEET INDEX

M-0.00 MECHANICAL TITLE SHEET
M-2-11 MAIN FLOOR PLAN MECHANICAL PROPOSED
M-2.12 SECOND FLOOR PLAN MECHANICAL PROPOSED
M-2.13 THIRD FLOOR PLAN MECHANICAL PROPOSED
M-2.14 MECHANICAL ROOF PLAN PROPOSED
M-9.00 MECHANICAL DETAIL SHEET

GARAVAGLIA ARCHITECTURE INC.
582 MARKET STREET
SUITE 1800
SAN FRANCISCO, CA 94104
T: 415.391.9633
F: 415.391.9647
www.garavaglia.com

1628 WEBSTER STREET
ALAMEDA, CALIFORNIA

CONVERSION TO AFFORDABLE HOUSING

REGISTERED PROFESSIONAL ENGINEER
BRUCE DOUGLAS
M25957
Exp: 6/30/2025
MECHANICAL
STATE OF CALIFORNIA

EDesignC Incorporated
ENGINEERING DESIGN COLLABORATIVE
582 MARKET STREET, SUITE 400
SAN FRANCISCO, CA 94104
212 9TH STREET, SUITE 203
OAKLAND, CA 94607
91 GREGORY LANE, SUITE 3
PLEASANT HILL, CA 94523
(415) 963-4303

MECHANICAL
TITLE SHEET

PROJ. NO. 2023-024
SCALE AS NOTED
DATE 24 JUL 2023
PHASE CD
DRAWN CD, CG, HC
CHECKED RL

NO.	DATE	REVISION
	24 JUL 2023	PERMIT SUBMITTAL

SHEET NO.
M-0.00

ALL DRAWINGS AND WRITTEN MATERIAL APPEARING HEREIN CONSTITUTE ORIGINAL AND UNPUBLISHED WORK OF THE ARCHITECT AND MAY NOT BE DUPLICATED, USED, OR DISCLOSED WITHOUT WRITTEN CONSENT OF THE ARCHITECT. COPYRIGHT 2023 GARAVAGLIA ARCHITECTURE, INC.

GENERAL NOTES

A. CONTRACTOR TO COORDINATE ALL TRADES.

B. VERIFY MOUNTING HEIGHTS WITH ARCHITECT.

C. SPLIT SYSTEM HEAT PUMPS AND PTHP UNITS TO BE SERVICED, FILTERS REPLACED, COILS CLEANED FINS STRAIGHTENED, DUCTS CLEANED, AND CONTROLS TESTED. EACH UNIT TO BE EVALUATED FOR REMAINING USEFUL LIFE AND RECOMMENDATION OF WHICH UNITS NEED REPLACEMENT IN-KIND MADE BY SERVICE TECHNICIAN.

D. EXHAUST FAN SYSTEMS TO BE SERVICED AND BALANCED. FANS TO BE EVALUATED FOR REMAINING USEFUL LIFE AND RECOMMENDATION OF WHICH UNITS NEED REPLACEMENT IN-KIND MADE BY SERVICE TECHNICIAN. SERVICE TO INCLUDE BELTS REPLACED AND TENSIONED, FANS AND DUCTS CLEANED AND EXHAUST GRILLES CLEANED.

SHEET NOTES (#)

1. SEE DETAIL 1/M-9.00 FOR KRH DUCTING TO ROOF. SEE DETAILS 1-3/A-9.02 FOR HOOD VENT DUCT SHAFTS.
2. FIVE 4" DRYER VENTS. TOD 8' AFF (AT CEILING) WALL CAPS WITH BACK DRAFT DAMPER, NO SCREEN. ARRANGE WALL CAPS TO MAINTAIN 3 FT CLEARANCE TO COMBUSTION AIR VENT IN WALL.
3. REPLACE BOTTOM 3' OF WINDOW WITH ~18"X36" SECURITY LOUVER WITH SCREEN.
4. EXISTING HVAC TO BE MODIFIED TO SERVE ALTERED SPACE.

GARAVAGLIA ARCHITECTURE INC.

582 MARKET STREET
SUITE 1800
SAN FRANCISCO, CA 94104
T: 415.391.9633
F: 415.391.9647

www.garavaglia.com

1628 WEBSTER STREET

ALAMEDA, CALIFORNIA

CONVERSION TO AFFORDABLE HOUSING

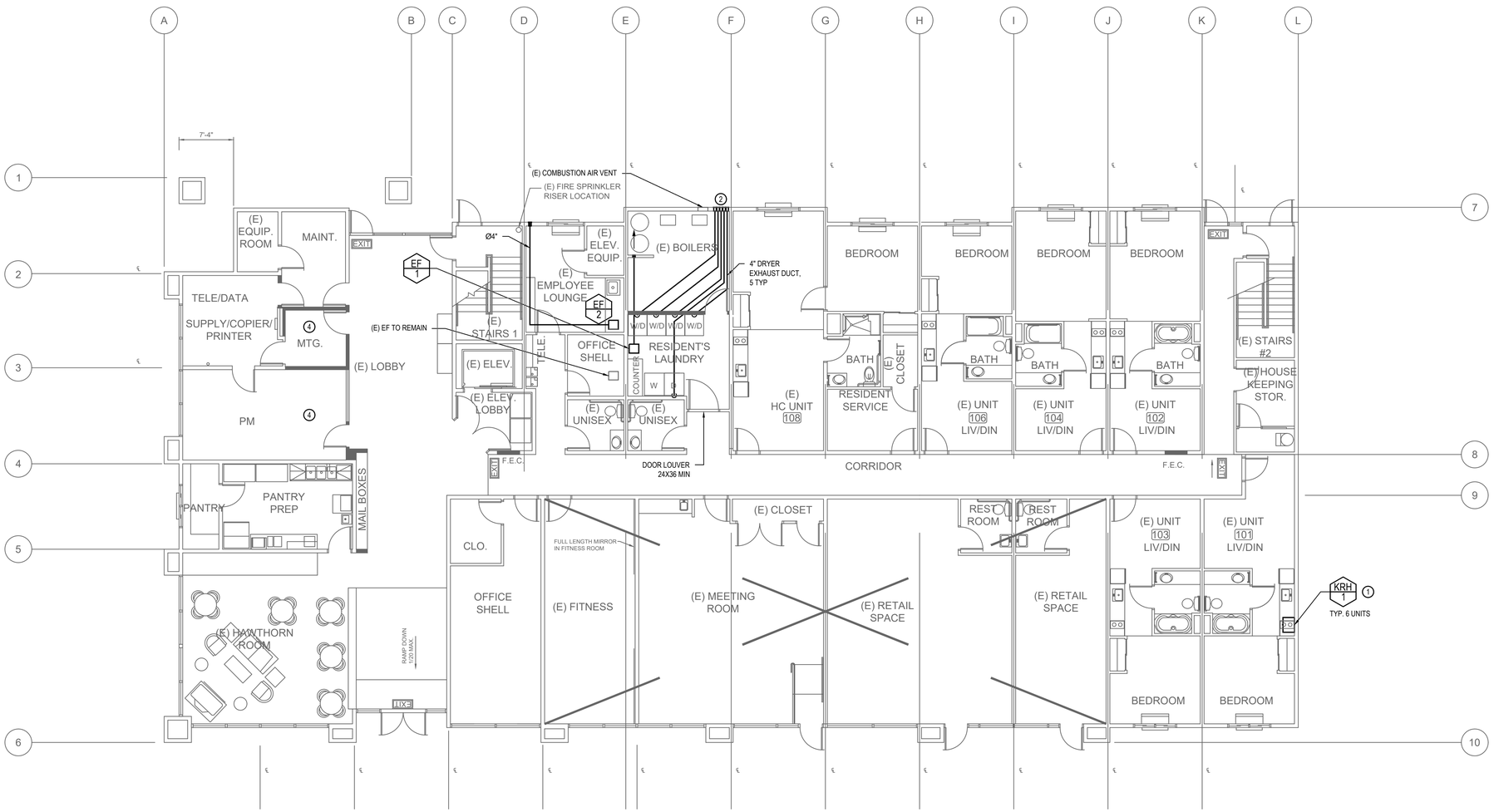

1 MAIN FLOOR MECHANICAL PLAN PROPOSED

SCALE: 1/8" = 1'-0"

N

REGISTERED PROFESSIONAL ENGINEER
BRUCE DOUGLAS
M25957
Exp: 6/30/2025
MECHANICAL
STATE OF CALIFORNIA

EDesignC Incorporated

ENGINEERING DESIGN COLLABORATIVE
582 MARKET STREET, SUITE 400
SAN FRANCISCO, CA 94104

212 9TH STREET, SUITE 203
OAKLAND, CA 94607

91 GREGORY LANE, SUITE 3
PLEASANT HILL, CA 94523

(415) 963-4303

MAIN FLOOR PLAN
MECHANICAL
PROPOSED

PROJ. NO.	2023-024
SCALE	AS NOTED
DATE	24 JUL 2023
PHASE	CD
DRAWN	CD, CG, HC
CHECKED	RL

NO.	DATE	REVISION
	24 JUL 2023	PERMIT SUBMITTAL

SHEET NO.

M-2.11

ALL DRAWINGS AND WRITTEN MATERIAL APPEARING HEREIN CONSTITUTE ORIGINAL AND UNPUBLISHED WORK OF THE ARCHITECT AND MAY NOT BE DUPLICATED, USED, OR DISCLOSED WITHOUT WRITTEN CONSENT OF THE ARCHITECT. COPYRIGHT 2023 GARAVAGLIA ARCHITECTURE, INC.

GENERAL NOTES

A. CONTRACTOR TO COORDINATE ALL TRADES.

B. VERIFY MOUNTING HEIGHTS WITH ARCHITECT.

C. SPLIT SYSTEM HEAT PUMPS AND PTHP UNITS TO BE SERVICED, FILTERS REPLACED, COILS CLEANED FINS STRAIGHTENED, DUCTS CLEANED, AND CONTROLS TESTED. EACH UNIT TO BE EVALUATED FOR REMAINING USEFUL LIFE AND RECOMMENDATION OF WHICH UNITS NEED REPLACEMENT IN-KIND MADE BY SERVICE TECHNICIAN.

D. EXHAUST FAN SYSTEMS TO BE SERVICED AND BALANCED. FANS TO BE EVALUATED FOR REMAINING USEFUL LIFE AND RECOMMENDATION OF WHICH UNITS NEED REPLACEMENT IN-KIND MADE BY SERVICE TECHNICIAN. SERVICE TO INCLUDE BELTS REPLACED AND TENSIONED, FANS AND DUCTS CLEANED AND EXHAUST GRILLES CLEANED.

SHEET NOTES (#)

1. SEE DETAILS 1/M-9.00 FOR KRH DUCTING TO ROOF. SEE DETAILS 1-3/A-9.02 FOR HOOD VENT DUCT SHAFTS.

GARAVAGLIA ARCHITECTURE INC.

582 MARKET STREET
SUITE 1800
SAN FRANCISCO, CA 94104
T: 415.391.9633
F: 415.391.9647

www.garavaglia.com

1628 WEBSTER STREET
ALAMEDA, CALIFORNIA

CONVERSION TO
AFFORDABLE HOUSING

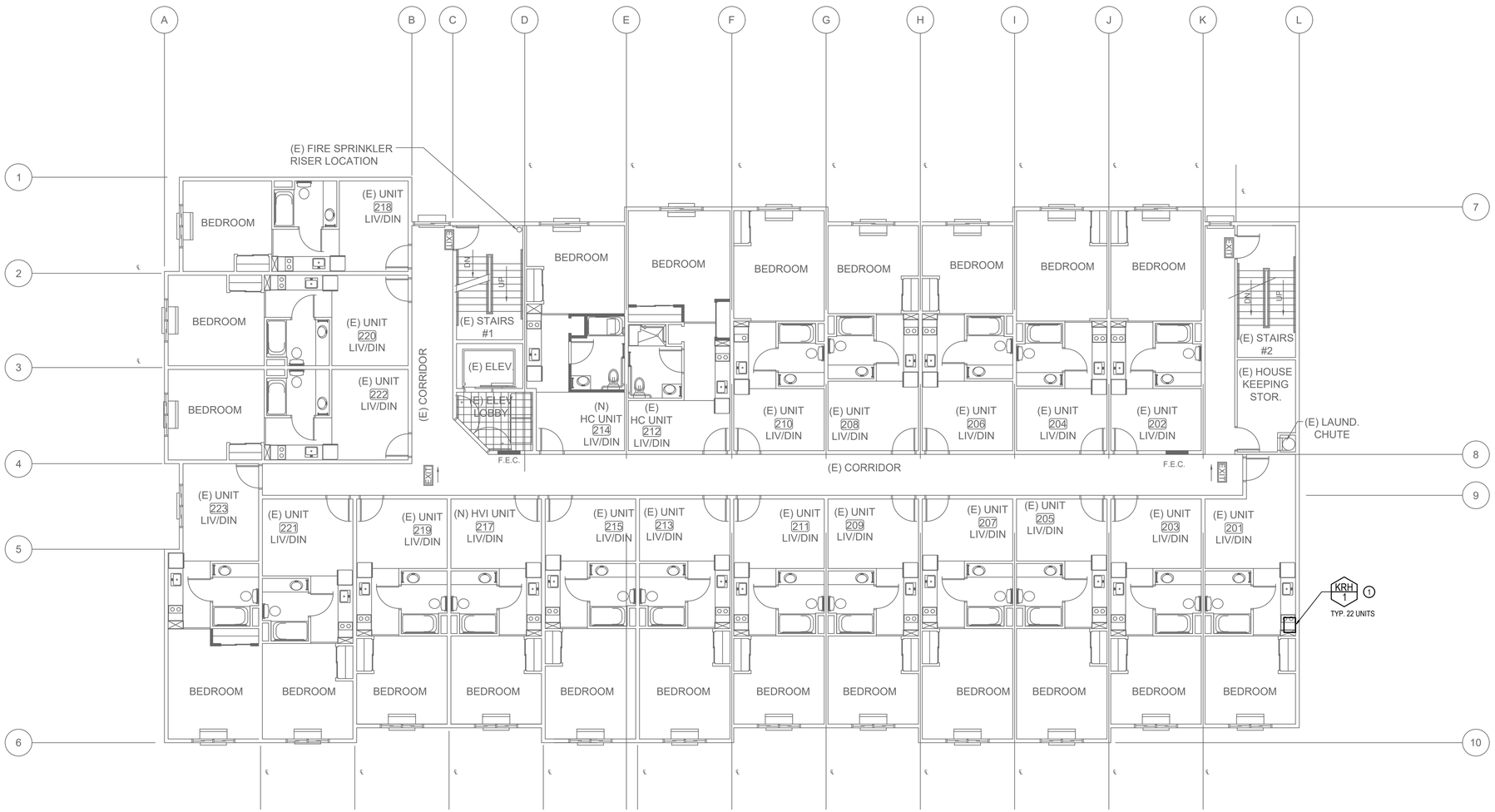

1 SECOND FLOOR MECHANICAL PLAN PROPOSED

SCALE: 1/8" = 1'-0"

N

REGISTERED PROFESSIONAL ENGINEER
BRUCE DOUGLAS
M25957
Exp: 6/30/2025
MECHANICAL
STATE OF CALIFORNIA

EDesignC Incorporated

ENGINEERING DESIGN COLLABORATIVE
582 MARKET STREET, SUITE 400
SAN FRANCISCO, CA 94104

212 9TH STREET, SUITE 203
OAKLAND, CA 94607

91 GREGORY LANE, SUITE 3
PLEASANT HILL, CA 94523

(415) 963-4303

SECOND FLOOR PLAN
MECHANICAL
PROPOSED

PROJ. NO.	2023-024
SCALE	AS NOTED
DATE	24 JUL 2023
PHASE	CD
DRAWN	CD, CG, HC
CHECKED	RL

NO.	DATE	REVISION
	24 JUL 2023	PERMIT SUBMITTAL

SHEET NO.
M-2.12

ALL DRAWINGS AND WRITTEN MATERIAL APPEARING HEREIN CONSTITUTE ORIGINAL AND UNPUBLISHED WORK OF THE ARCHITECT AND MAY NOT BE DUPLICATED, USED, OR DISCLOSED WITHOUT WRITTEN CONSENT OF THE ARCHITECT. COPYRIGHT 2023 GARAVAGLIA ARCHITECTURE, INC.

GENERAL NOTES

A. CONTRACTOR TO COORDINATE ALL TRADES.

B. VERIFY MOUNTING HEIGHTS WITH ARCHITECT.

C. SPLIT SYSTEM HEAT PUMPS AND PTHP UNITS TO BE SERVICED, FILTERS REPLACED, COILS CLEANED FINS STRAIGHTENED, DUCTS CLEANED, AND CONTROLS TESTED. EACH UNIT TO BE EVALUATED FOR REMAINING USEFUL LIFE AND RECOMMENDATION OF WHICH UNITS NEED REPLACEMENT IN-KIND MADE BY SERVICE TECHNICIAN.

D. EXHAUST FAN SYSTEMS TO BE SERVICED AND BALANCED. FANS TO BE EVALUATED FOR REMAINING USEFUL LIFE AND RECOMMENDATION OF WHICH UNITS NEED REPLACEMENT IN-KIND MADE BY SERVICE TECHNICIAN. SERVICE TO INCLUDE BELTS REPLACED AND TENSIONED, FANS AND DUCTS CLEANED AND EXHAUST GRILLES CLEANED.

SHEET NOTES (#)

1. SEE DETAILS 1/M-9.00 FOR KRH DUCTING TO ROOF. SEE DETAILS 1-3/A-9.02 FOR HOOD VENT DUCT SHAFTS.

GARAVAGLIA ARCHITECTURE INC.

582 MARKET STREET
SUITE 1800
SAN FRANCISCO, CA 94104
T: 415.391.9633
F: 415.391.9647

www.garavaglia.com

1628 WEBSTER STREET

ALAMEDA, CALIFORNIA

CONVERSION TO
AFFORDABLE HOUSING

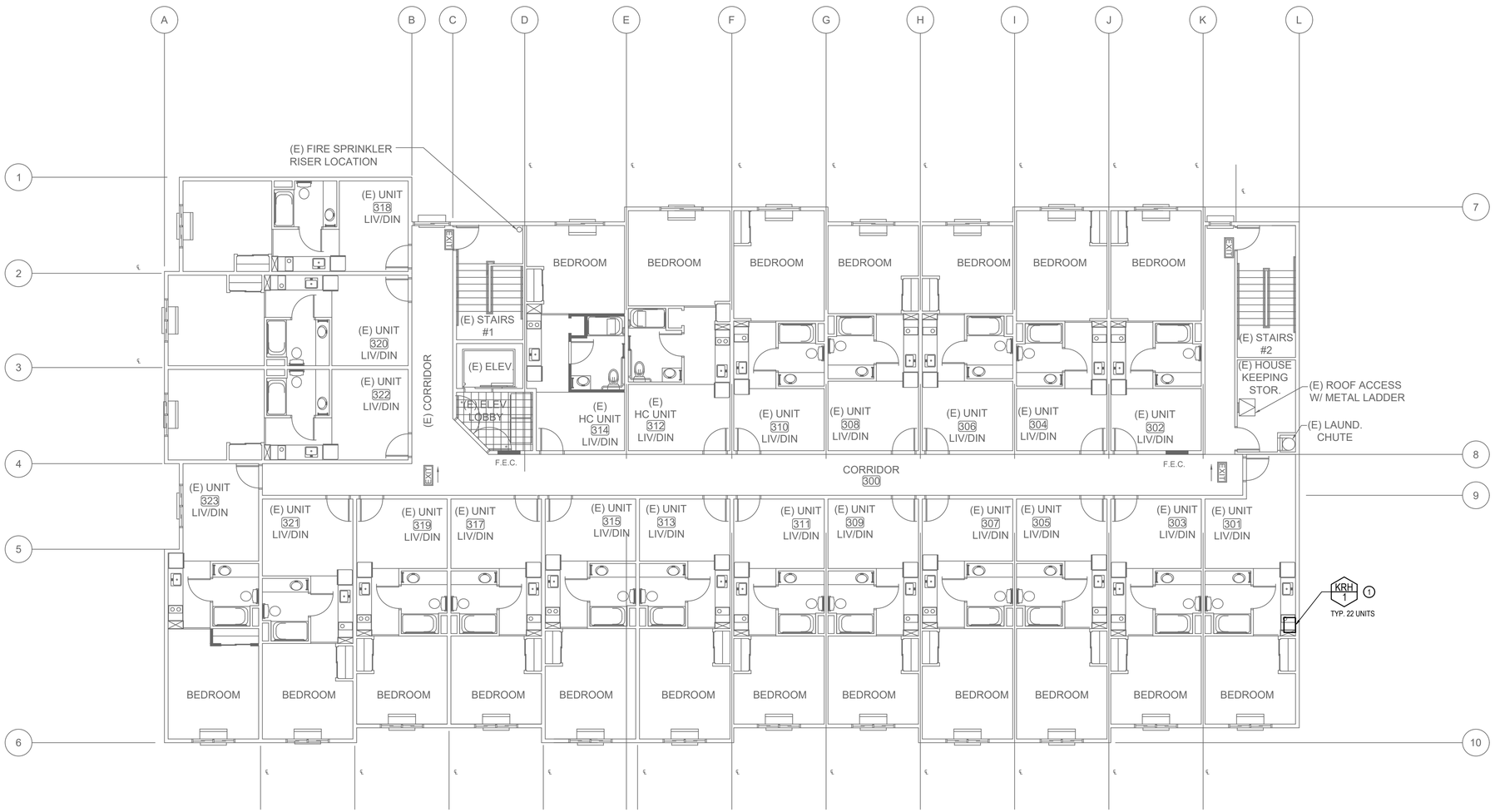

1 THIRD FLOOR MECHANICAL PLAN PROPOSED

SCALE: 1/8" = 1'-0"

N

REGISTERED PROFESSIONAL ENGINEER
BRUCE DOUGLAS
M25957
Exp: 6/30/2025
MECHANICAL
STATE OF CALIFORNIA

EDesignC Incorporated

ENGINEERING DESIGN COLLABORATIVE
582 MARKET STREET, SUITE 400
SAN FRANCISCO, CA 94104

212 9TH STREET, SUITE 203
OAKLAND, CA 94607

91 GREGORY LANE, SUITE 3
PLEASANT HILL, CA 94523

(415) 963-4303

THIRD FLOOR PLAN
MECHANICAL
PROPOSED

PROJ. NO.	2023-024
SCALE	AS NOTED
DATE	24 JUL 2023
PHASE	CD
DRAWN	CD, CG, HC
CHECKED	RL

NO.	DATE	REVISION
	24 JUL 2023	PERMIT SUBMITTAL

SHEET NO.
M-2.13

ALL DRAWINGS AND WRITTEN MATERIAL APPEARING HEREIN CONSTITUTE ORIGINAL AND UNPUBLISHED WORK OF THE ARCHITECT AND MAY NOT BE DUPLICATED, USED, OR DISCLOSED WITHOUT WRITTEN CONSENT OF THE ARCHITECT. COPYRIGHT 2023 GARAVAGLIA ARCHITECTURE, INC.

GENERAL NOTES

A. CONTRACTOR TO COORDINATE ALL TRADES.

B. VERIFY MOUNTING HEIGHTS WITH ARCHITECT.

C. SPLIT SYSTEM HEAT PUMPS AND PTHP UNITS TO BE SERVICED, FILTERS REPLACED, COILS CLEANED FINS STRAIGHTENED, DUCTS CLEANED, AND CONTROLS TESTED. EACH UNIT TO BE EVALUATED FOR REMAINING USEFUL LIFE AND RECOMMENDATION OF WHICH UNITS NEED REPLACEMENT IN-KIND MADE BY SERVICE TECHNICIAN.

D. EXHAUST FAN SYSTEMS TO BE SERVICED AND BALANCED. FANS TO BE EVALUATED FOR REMAINING USEFUL LIFE AND RECOMMENDATION OF WHICH UNITS NEED REPLACEMENT IN-KIND MADE BY SERVICE TECHNICIAN. SERVICE TO INCLUDE BELTS REPLACED AND TENSIONED, FANS AND DUCTS CLEANED AND EXHAUST GRILLES CLEANED.

SHEET NOTES (#)

1. KRH EXHAUST ROOF CAP.

GARAVAGLIA ARCHITECTURE INC.

582 MARKET STREET
SUITE 1800
SAN FRANCISCO, CA 94104
T: 415.391.9633
F: 415.391.9647

www.garavaglia.com

1628 WEBSTER STREET

ALAMEDA, CALIFORNIA

CONVERSION TO
AFFORDABLE HOUSING

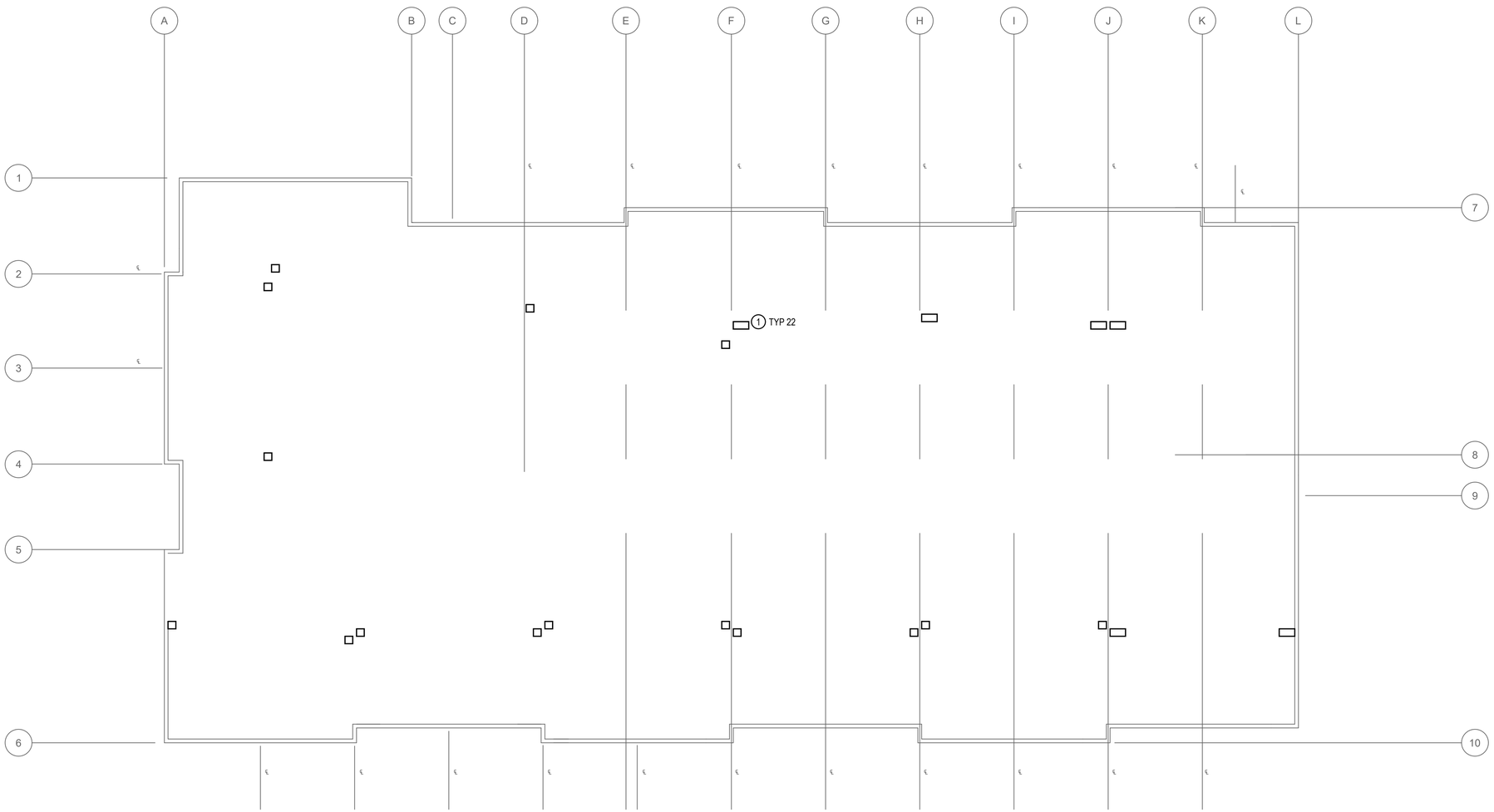

1 ROOF MECHANICAL PLAN PROPOSED

SCALE: 1/8" = 1'-0"

N

REGISTERED PROFESSIONAL ENGINEER
BRUCE DOUGLAS
M25957
Exp: 6/30/2025
MECHANICAL
STATE OF CALIFORNIA

EDesignC Incorporated

ENGINEERING DESIGN COLLABORATIVE
582 MARKET STREET, SUITE 400
SAN FRANCISCO, CA 94104

212 9TH STREET, SUITE 203
OAKLAND, CA 94607

91 GREGORY LANE, SUITE 3
PLEASANT HILL, CA 94523

(415) 963-4303

ROOF PLAN
MECHANICAL
PROPOSED

PROJ. NO. 2023-024
SCALE AS NOTED
DATE 24 JUL 2023
PHASE CD
DRAWN CD, CG, HC
CHECKED RL

NO.	DATE	REVISION
	24 JUL 2023	PERMIT SUBMITTAL

SHEET NO.
M-2.14

ALL DRAWINGS AND WRITTEN MATERIAL APPEARING HEREIN CONSTITUTE ORIGINAL AND UNPUBLISHED WORK OF THE ARCHITECT AND MAY NOT BE DUPLICATED, USED, OR DISCLOSED WITHOUT WRITTEN CONSENT OF THE ARCHITECT. COPYRIGHT 2023 GARAVAGLIA ARCHITECTURE, INC.

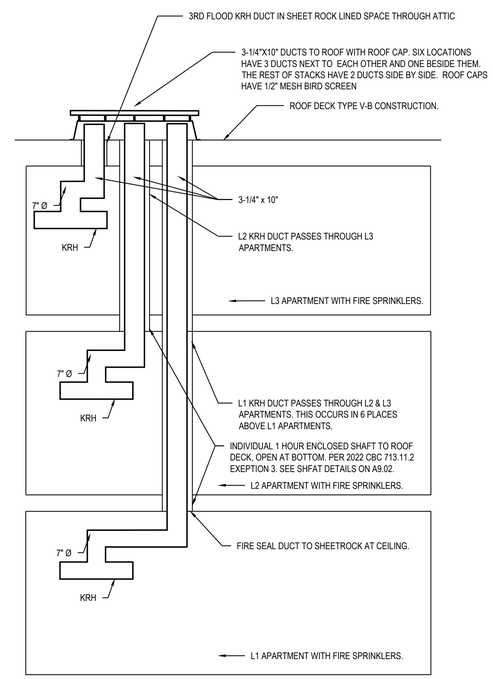

1 POPPY PLACE KRH DUCT SECTION DETAIL

SCALE: NONE

GARAVAGLIA ARCHITECTURE INC.
582 MARKET STREET
SUITE 1800
SAN FRANCISCO, CA 94104
T: 415.391.9633
F: 415.391.9647

www.garavaglia.com

1628 WEBSTER STREET

ALAMEDA, CALIFORNIA

CONVERSION TO AFFORDABLE HOUSING

REGISTERED PROFESSIONAL ENGINEER
BRUCE DOUGLAS
M25957
Exp: 6/30/2025
MECHANICAL
STATE OF CALIFORNIA

EDesignC Incorporated

ENGINEERING DESIGN COLLABORATIVE
582 MARKET STREET, SUITE 400
SAN FRANCISCO, CA 94104

212 9TH STREET, SUITE 203
OAKLAND, CA 94607

91 GREGORY LANE, SUITE 3
PLEASANT HILL, CA 94523

(415) 963-4303

MECHANICAL

DETAIL SHEET

PROJ. NO.	2023-024
SCALE	AS NOTED
DATE	24 JUL 2023
PHASE	CD
DRAWN	CD, CG, HC
CHECKED	RL

NO.	DATE	REVISION
	24 JUL 2023	PERMIT SUBMITTAL

SHEET NO.

M-9.00

ALL DRAWINGS AND WRITTEN MATERIAL APPEARING HEREIN CONSTITUTE ORIGINAL AND UNPUBLISHED WORK OF THE ARCHITECT AND MAY NOT BE DUPLICATED, USED, OR DISCLOSED WITHOUT WRITTEN CONSENT OF THE ARCHITECT.
COPYRIGHT 2023 GARAVAGLIA ARCHITECTURE, INC.

GENERAL PLUMBING NOTES

1. ALL WORK SHALL COMPLY WITH THE REQUIREMENTS OF TITLE 24 OF THE CALIFORNIA CODE OF REGULATIONS (C.C.R.), 2022 CPC.
2. ALL SYSTEMS SHALL BE INSTALLED IN STRICT ACCORDANCE WITH ALL APPLICABLE CITY, COUNTY, FEDERAL AND STATE CODES AND ORDINANCES, AND SHALL MEET ALL REQUIREMENTS OF ALL AUTHORITIES HAVING JURISDICTION.
3. DRAWINGS SHOWING THE LOCATIONS OF PLUMBING EQUIPMENT, PIPING, ETC. ARE DIAGRAMMATIC AND JOB CONDITIONS WILL NOT ALWAYS PERMIT THEIR INSTALLATION ON THE LOCATIONS SHOWN. THE PLUMBING DRAWINGS SHOW THE GENERAL ARRANGEMENTS OF EQUIPMENT, PIPING, ETC. AND SHALL BE FOLLOWED AS CLOSELY AS ACTUAL BUILDING CONSTRUCTION AND THE WORK OF OTHER TRADES WILL PERMIT. THE ARCHITECTURAL DRAWINGS SHALL BE PART OF THE WORK INSOFAR AS THESE DRAWINGS FURNISH THE CONTRACTOR WITH INFORMATION RELATING TO DESIGN AND CONSTRUCTION OF THE BUILDING.
4. FURNISH AND INSTALL ANY INCIDENTAL WORK NOT SHOWN OR SPECIFIED WHICH ARE NECESSARY TO PROVIDE A COMPLETE AND WORKABLE SYSTEM.
5. PRIOR TO SUBMISSION OF BID, REVIEW FULL SET OF NEW CONSTRUCTION DRAWINGS (INCLUDING ALL OTHER TRADES). INCLUDE ANY ADDITIONAL PIPE OFF-SETS THAT ARE NOT CURRENTLY SHOWN ON DRAWINGS BUT MAY BE REQUIRED TO CLEAR STRUCTURE, FINISHES OR WORK OF OTHER TRADES. NO EXTRA PAYMENT WILL BE ALLOWED FOR WORK RESULTING FROM LACK OF PROPER INITIAL APPRAISAL OF ENTIRE SCOPE OF WORK. SUBMIT REQUESTS FOR INFORMATION (RFIS) AS REQUIRED TO ANSWER ANY QUESTIONS THAT MAY ARISE DURING BIDDING PHASE. CLEARLY INDICATE SCOPE INCLUSION AND EXCLUSION IN BID.
6. FOR EXACT LOCATIONS OF PLUMBING FIXTURES, SEE ARCHITECTURAL DRAWINGS.
7. PROVIDE CLEANOUTS ON DRAINAGE LINES IN ACCORDANCE WITH THE CALIFORNIA PLUMBING CODE AND AS INDICATED ON THE DRAWINGS.
8. ALL SANITARY SEWER PIPING SHALL BE SLOPED AT 1/4" PER FOOT FOR PIPING LESS THAN 4" IN DIAMETER AND AT 1/8" PER FOOT FOR PIPES 4" OR GREATER UNLESS NOTED OTHERWISE.
9. ALL PLUMBING EQUIPMENT SHALL BE SECURELY FASTENED TO THE BUILDING STRUCTURES.
10. WHERE MAIN PIPE SIZE IS NOT INDICATED BETWEEN BRANCH CONNECTIONS ON THE DRAWING, THE PIPE SIZE SHALL BE OF THE PRECEDING PIPE SIZE.
11. ALL VALVES AND ACCESSORIES SHALL BE FULL LINE SIZE. PROVIDE ALL NECESSARY UNIONS, REDUCERS AND STOPS AS REQUIRED WHEN CONNECTING TO EACH FIXTURE AND/OR EQUIPMENT.
12. KEEP ALL PLUMBING PIPING AS HIGH AS POSSIBLE TO THE STRUCTURE ABOVE AND OFFSET PIPING AS REQUIRED.
13. INSTALL ACCESS PANELS IN ALL NON-ACCESSIBLE CEILINGS AND WALLS FOR VALVES AND OTHER MAINTENANCE ITEMS. REFER TO ARCHITECTURAL PLANS FOR TYPES OF CEILINGS AND WALLS. INSTALL FIRE RATED ACCESS PANELS IN FIRE RATED CEILINGS AND WALLS. ALL ACCESS PANEL/DOOR LOCATIONS SHALL BE APPROVED BY THE ARCHITECT. OFFSET PLUMBING PIPING AND ACCESSORIES AS REQUIRED.
14. CLOSELY COORDINATE WORK WITH ALL TRADES.
15. FOR ANY CONFLICT IN THE DRAWINGS AND/OR SPECIFICATIONS, THE MORE STRINGENT REQUIREMENT SHALL APPLY. ANY SUCH CONFLICT SHALL BE BROUGHT TO THE ATTENTION OF THE ARCHITECT OR ENGINEER FOR RESOLUTION PRIOR TO THE CONSTRUCTION OF SUCH ITEMS.
16. CHANGES IN THE DIRECTION OF DRAINAGE FLOW SHALL BE PER CALIFORNIA PLUMBING CODE.
17. PROVIDE VALVES WHERE SHOWN ON FLOOR PLAN AND PIPING DIAGRAMS.
18. ALL PIPING PENETRATION THROUGH RATED WALLS AND FLOORS SHALL BE SEALED WITH UL-LISTED AND CALIFORNIA FIRE MARSHAL LISTED SEALANTS. SEE ARCHITECTURAL DRAWINGS FOR ALL LOCATIONS.
19. PROVIDE DIELECTRIC INSULATING CONNECTIONS BETWEEN ALL DISSIMILAR METALS.
20. PROVIDE INSULATION ON HW AND HWR PIPING AS REQUIRED BY CALIFORNIA ENERGY CODES.
21. PROVIDE TEMPERATURE AND PRESSURE RELIEF VALVES AND DRAIN PIPING PER CALIFORNIA PLUMBING CODE.

PLUMBING FIXTURE SCHEDULE

SYMBOL	TYPE	AREA SERVED	CONNECTIONS				DESCRIPTION
			CW	HW	SS	V	
F-1	FAUCET	APARTMENTS	1/2"	1/2"	---	---	CHICAGO SINGLE LEVER 8" SWING SPOUT FAUCET WITH LOW FLOW AERATOR (1.5 GPM)
SH-1	SHOWER (ADA)	APARTMENTS	1/2"	1/2"	2"	1-1/2"	FLORESTONE BARRIER-FREE SHOWER #35-62H, 60"x34x80". PROVIDE WITH STAINLESS STEEL STEEL CURTAIN ROD, SYMMONS® PRESSURE BALANCE MIXING VALVE WITH CONCEALED CHECK STOPS; MOEN® HAND-HELD SHOWER HEAD WITH HOSE AND CHROME-PLATED SLIDE BAR; STAINLESS STEEL CORNER GRAB BAR; STAINLESS STEEL RECESSED SOAP DISH; WHITE NAUGAHYDE FOLDING WHEELCHAIR TRANSFER SEAT TO MEET ADA REQUIREMENTS.
WB-1	WASHER BOX	LAUNDRY ROOM	1/2"	1/2"	2"	1-1/2"	SIOUX CHIEF MODEL #696G230 ABS WASHER BOX WITH GALVANIZED STEEL BRACKET, HOT AND COLD WATER BIBB CONNECTIONS AND 2" DRAIN. PROVIDE WATER HAMMER ARRESTER ON WASHER BOX CW SUPPLY.
FD-1	FLOOR DRAIN	LAUNDRY ROOM	---	---	2"	1-1/2"	JR SMITH 2005Y WITH ADJUSTABLE STRAINER HEAD. VANDAL PROOF SCREWS, NICKEL BRONZE STRAINER. PROVIDE WITH TRAP PRIMER CONNECTION.
TP-1	TRAP PRIMER	LAUNDRY ROOM	1/2"	---	---	---	PRECISION PLUMBING PRODUCTS, INC. #PR-500 PRIME RITE FOR 1 OR 2 FLOOR DRAINS AND FLOOR SINKS. PROVIDE 12"x12" ACCESS DOOR FOR CONCEALED UNITS.

SYMBOLS

NOTE: NOT ALL SYMBOLS APPLY

SYMBOL	ABBR	DESCRIPTION
1 / P-1		DETAIL NUMBER / DRAWING NUMBER
1 / P-1		SECTION NUMBER / DRAWING NUMBER
WH / 1		EQUIPMENT TYPE / UNIT NUMBER
	SS	SANITARY SEWER (UNDERGROUND/UNDERSLAB)
		SANITARY SEWER (ABOVE FLOOR OR OVERHEAD)
	V	SANITARY VENT
	SD	STORM DRAIN
	SD-FTP	STORM DRAIN TO FLOW-THRU-PLANTER
	OD	OVERFLOW DRAIN (FOR ROOF DRAINS)
CD	CD	CONDENSATE DRAIN
IW	IW	INDIRECT WASTE
	CW	COLD WATER SUPPLY
	HW	HOT WATER SUPPLY
	HWR	HOT WATER RECIRCULATING
TW	TW	TEMPERED WATER
G	G	NATURAL GAS - LOW PRESSURE
MG	MG	NATURAL GAS - MEDIUM PRESSURE
	FCO, COTG	FLOOR CLEANOUT OR CLEANOUT TO GRADE
	WCO, CO	WALL CLEANOUT OR CLEANOUT
		PIPE BREAK
		PIPE RISER UP (ELBOW)
		PIPE RISER DOWN (ELBOW)
		PETE'S PLUG
		MAIN WATER SHUT FOR BUILDING
	UN	UNION
	CV	CHECK VALVE
	GV	GATE VALVE
	PRV	PRESSURE REDUCING VALVE
	BV	BALL VALVE
	GC	GAS COCK
	BFV	BUTTERFLY VALVE
	BLNV	BALANCING VALVE
	CS	CIRCUIT SETTER
	PTRV	PRESSURE AND TEMPERATURE RELIEF VALVE
		THERMOMETER
	PG	PRESSURE GAUGE WITH GAUGE COCK
RPBP	RPBP	REDUCED PRESSURE BACKFLOW PREVENTER
	HB	HOSE BIBB
	T-1	PLUMBING FIXTURE IDENTIFICATION
	1	PLUMBING SHEET NOTE

ABBREVIATIONS

NOTE: NOT ALL ABBREVIATIONS APPLY

ABC	ABOVE CEILING (OVERHEAD)	LAB	LABORATORY
AC	AIR CONDITIONING	LBS	POUNDS
AFF	ABOVE FINISHED FLOOR	LVL	LEVEL
AG	ABOVE GRADE	LWT	LEAVING WATER TEMPERATURE
AMP	AMPERES	MAX	MAXIMUM
ARCH	ARCHITECTURAL	MBH	THOUSAND BTU PER HOUR
BFF	BELOW FINISHED FLOOR	MIN	MINIMUM
BG	BELOW GRADE	MISC	MISCELLANEOUS
BHP	BRAKE HORSEPOWER	N/A	NOT APPLICABLE
BLDG	BUILDING	NIC	NOT IN CONTRACT
BOF	BOTTOM OF FOOTING	NO	NUMBER
BTU	BRITISH THERMAL UNIT	NTS	NOT TO SCALE
BTUH	BRITISH THERMAL UNIT PER HOUR	OC	ON CENTER
CFH	CUBIC FEET PER HOUR	OD	OUTSIDE DIAMETER
CLG	CEILING	OH	OVERHEAD
CONC	CONCRETE	PD	PRESSURE DROP
COTG	CLEAN OUT TO GRADE	POC	POINT OF CONNECTION
DIA	DIAMETER	POD	POINT OF DEMOLITION
(E)	EXISTING	PSI	POUNDS PER SQUARE INCH
EA	EACH	PSIG	POUNDS PER SQUARE INCH GAUGE
EFF	EFFICIENCY	RIO	ROUGH-IN ONLY
ELEC	ELECTRICAL	RPM	REVOLUTIONS PER MINUTE
EWT	ENTERING WATER TEMPERATURE	SAD	SEE ARCHITECTURAL DRAWINGS
FD	FLOOR DRAIN	SCD	SEE CIVIL DRAWINGS
FT	FOOT OR FEET	SED	SEE ELECTRICAL DRAWINGS
FU	FIXTURE UNIT	SMD	SEE MECHANCAL DRAWINGSSL SLOPE
GA	GAUGE	SP	STATIC PRESSURE
GAL	GALLON	SPECS	SPECIFICATIONS
GALV	GALVANIZED	STD	STANDARD
GPH	GALLONS PER HOUR	STRUCT	STRUCTURAL
GPM	GALLONS PER MINUTE	TDH	TOTAL DYNAMIC HEAD
H&CW	HOT AND COLD WATER	TEMP	TEMPERATURE
HD	HEAD	TYP	TYPICAL
HP	HORSEPOWER	UF	UNDERFLOOR
HVAC	HEATING, VENT & AIR CONDITIONING	UG	UNDERGROUND
ID	INSIDE DIAMETER	UON	UNLESS OTHERWISE NOTED
IE	INVERT ELEVATION	V	VENT OR VOLTS
IN	INCH	VTR	VENT THROUGH ROOF
KW	KILOWATTS	W	WATTS
		WT	WEIGHT

SCOPE OF WORK

1. FIRST FLOOR:
   - REMOVE LAUNDRY ROOM PIPING IN COMMERCIAL AND GUEST LAUNDRY ROOMS. RESERVE CW, HW, SS, V IN COMMERCIAL LAUNDRY ROOM FOR CONNECTION TO NEW COIN OP WASHERS. CAP REMOVED GUEST LAUNDRY PIPES IN WALL.
   - REMOVE PLUMBING ASSOCIATED WITH THE REMOVED SPA. REMOVE OR ABANDON UNDER-SLAB PIPING IN PLACE IN PREPARATION FOR PATCHING SLAB AT REMOVED SPA.
   - VERIFY LOCATION OF EXISTING LAUNDRY ROOM FLOOR DRAIN. ALLOW FOR RELOCATION OF FLOOR DRAIN IF REQUIRED TO PROVIDE DRAINAGE TO THE RECONFIGURED LAUNDRY ROOM.
   - PROVIDE AND INSTALL NEW WASHER BOXES WITH WATER HAMMER ARRESTORS AND CW, HW, SS, V CONNECTIONS TO EXISTING BUILDING PIPING.
2. SECOND AND THIRD FLOOR:
   - REMOVE (E) KITCHENETTE SINKS. REMOVE FAUCETS FROM SINKS. RESERVE SINKS FOR INSTALLATION IN NEW CABINETS.
   - REINSTALL RESERVED SINKS IN NEW CABINETS. PROVIDE AND INSTALL NEW FAUCET, FLEXIBLE CONNECTIONS, HW & CW SHUT-OFF 1/4 TURN VALVES AND 17 GAUGE BRASS P-TRAPS/ARMS.
   - EVALUATE EXISTING BATHROOM FAUCETS AND TOILET FLUSHFILL VALVES FOR FUNCTION, LEAKAGE, AND FLOW RATE. ALLOW FOR REPLACEMENT OF ANY DEFICIENT OR MISSING DEVICES IN-KIND. ALLOW FOR REPLACMENT ANY SHOWER HEADS THAT ARE RATED HIGHER THAN 1.8GPM FLOW, AND ANY FAUCET AERATORS THAT ARE RATED HIGHER THAN 1.5GPM FLOW.

FIRE PROTECTION DEFERRED SUBMITTAL
- SPRINKLERS MAY REQUIRE RELOCATION IN COMMON AREA SPACES WITH WALL ALTERATIONS.

APPLICABLE CODES

1. 2022 BUILDING STANDARD ADMINISTRATIVE CODE, PART 1, TITLE 24 C.C.R.
2. 2022 CALIFORNIA BUILDING CODE (CBC), PART 2, TITLE 24 C.C.R.
3. 2022 CALIFORNIA ELECTRICAL CODE (CEC), PART 3, TITLE 24 C.C.R.
4. 2022 CALIFORNIA MECHANICAL CODE (CMC), PART 4, TITLE 24 C.C.R.
5. 2022 CALIFORNIA PLUMBING CODE (CPC), PART 5, TITLE 24 C.C.R.
6. 2022 CALIFORNIA ENERGY CODE, PART 6, TITLE 24 C.C.R.
7. 2022 CALIFORNIA FIRE CODE (CFC), PART 9, TITLE 24, C.C.R.
9. 2022 CALIFORNIA EXISTING BUILDING CODE, PART 10, TITLE 24 C.C.R.
10. 2022 CALIFORNIA "GREEN" BUILDING REQUIREMENTS, PART 11, TITLE 24 C.C.R.
11. 2022 CALIFORNIA REFERENCED STANDARDS CODE, PART 12, TITLE 24, C.C.R.
12. TITLE 19, C.C.R., PUBLIC SAFETY, STATE FIRE MARSHAL REGULATIONS

NFPA 13, AUTOMATIC SPRINKLER SYSTEM, 2022 EDITION
NFPA 14, STANDPIPE AND HOSE SYSTEMS, 2022 EDITION
NFPA 72, NATIONAL FIRE ALARM CODE, 2022 EDITION
LOCAL MUNICIPAL BUILDING CODES

SHEET INDEX

P-0.00	PLUMBING TITLE SHEET
P-2.01	MAIN FLOOR PLUMBING PLAN DEMO
P-2.11	MAIN FLOOR PLAN PLUMBING PROPOSED
P-2.12	SECOND FLOOR PLUMBING PROPOSED
P-2.13	THIRD FLOOR PLUMBING PROPOSED

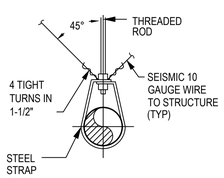

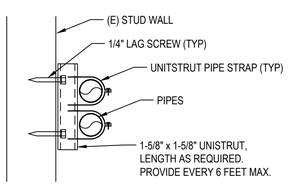

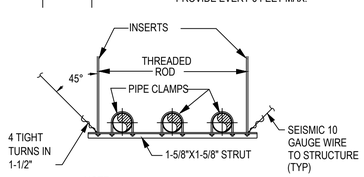

NOTE:
REFER TO DETAIL 2, THIS SHEET, FOR UPPER ATTACHMENTS.

3 PIPING SUPPORT DETAIL
SCALE: NONE

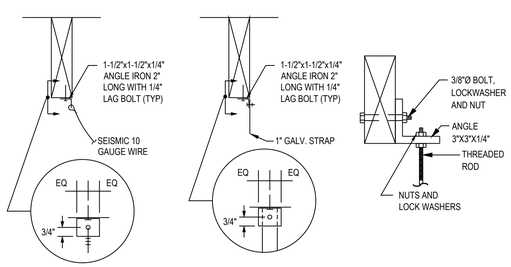

2 UPPER ATTACHMENT DETAIL
SCALE: NONE

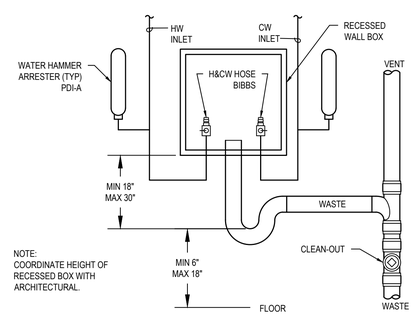

NOTE:
COORDINATE HEIGHT OF RECESSED BOX WITH ARCHITECTURAL.

1 WASHER BOX DETAIL
SCALE: NONE

GARAVAGLIA ARCHITECTURE INC.
582 MARKET STREET
SUITE 1800
SAN FRANCISCO, CA 94104
T: 415.391.9633
F: 415.391.9647
www.garavaglia.com

1628 WEBSTER STREET
ALAMEDA, CALIFORNIA

CONVERSION TO AFFORDABLE HOUSING

REGISTERED PROFESSIONAL ENGINEER
JAMES DYER
M25378
Exp: 9/30/2024
MECHANICAL
STATE OF CALIFORNIA

EDesignC Incorporated
ENGINEERING DESIGN COLLABORATIVE
582 MARKET STREET, SUITE 400
SAN FRANCISCO, CA 94104
212 9TH STREET, SUITE 203
OAKLAND, CA 94607
91 GREGORY LANE, SUITE 3
PLEASANT HILL, CA 94523
(415) 963-4303

PLUMBING
TITLE SHEET

PROJ. NO.	2023-024
SCALE	AS NOTED
DATE	24 JUL 2023
PHASE	CD
DRAWN	CD, CG, HC
CHECKED	RL

NO.	DATE	REVISION
	24 JUL 2023	PERMIT SUBMITTAL

SHEET NO.
P-0.00

ALL DRAWINGS AND WRITTEN MATERIAL APPEARING HEREIN CONSTITUTE ORIGINAL AND UNPUBLISHED WORK OF THE ARCHITECT AND MAY NOT BE DUPLICATED, USED, OR DISCLOSED WITHOUT WRITTEN CONSENT OF THE ARCHITECT. COPYRIGHT 2023 GARAVAGLIA ARCHITECTURE, INC.

SHEET NOTES

1. REMOVE (E) SINK AND RETAIN FOR REINSTALLATION. PIPE CONNECTIONS TO REMAIN FOR REINSTALLATION.

GARAVAGLIA ARCHITECTURE INC.

582 MARKET STREET
SUITE 1800
SAN FRANCISCO, CA 94104
T: 415.391.9633
F: 415.391.9647

www.garavaglia.com

1628 WEBSTER STREET
ALAMEDA, CALIFORNIA

CONVERSION TO
AFFORDABLE HOUSING

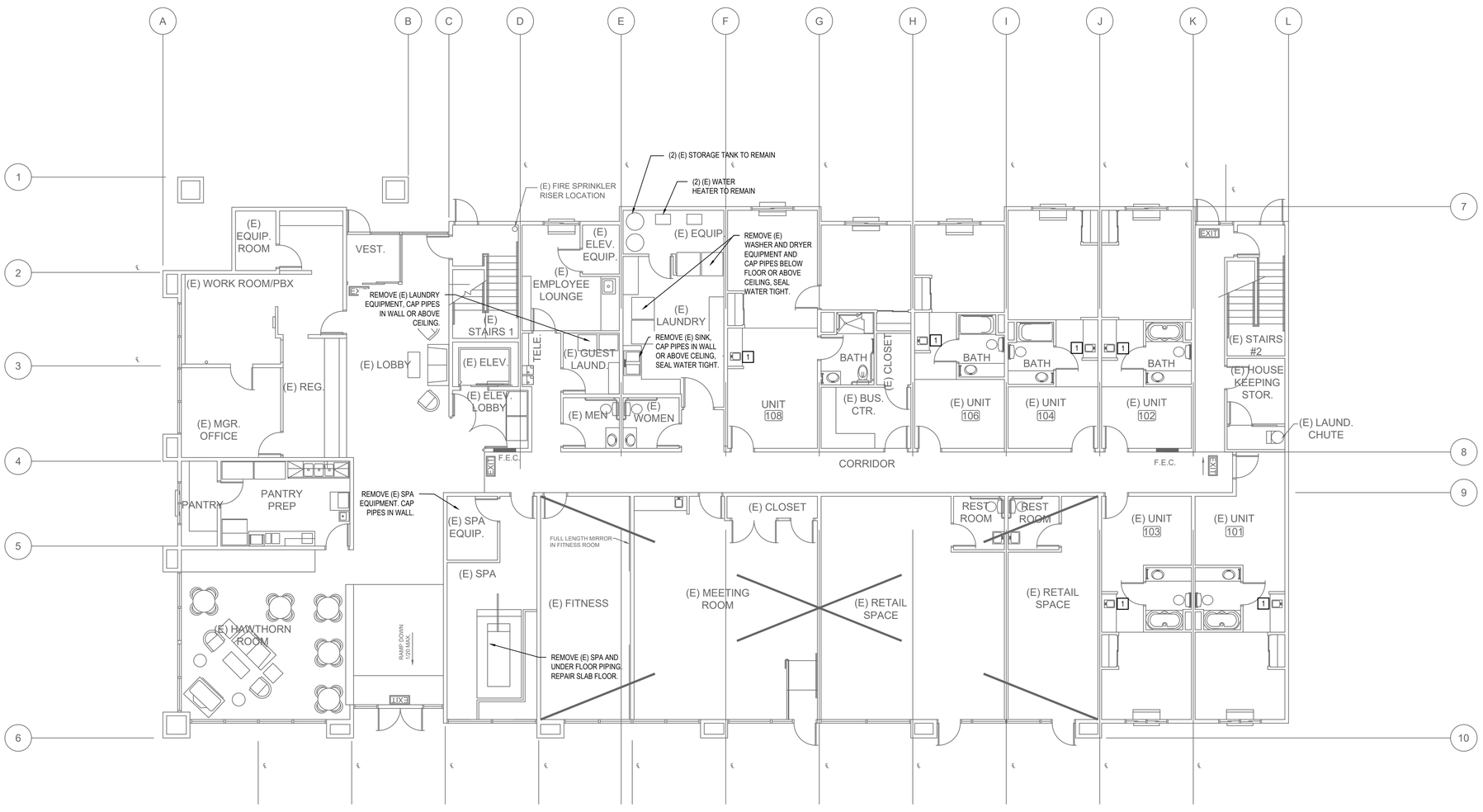

1 MAIN FLOOR PLUMBING PLAN DEMOLITION

SCALE: 1/8" = 1'-0"

N

REGISTERED PROFESSIONAL ENGINEER
JAMES DYER
M25378
Exp: 9/30/2024
MECHANICAL
STATE OF CALIFORNIA

EDesignC Incorporated

ENGINEERING DESIGN COLLABORATIVE
582 MARKET STREET, SUITE 400
SAN FRANCISCO, CA 94104

212 9TH STREET, SUITE 203
OAKLAND, CA 94607

91 GREGORY LANE, SUITE 3
PLEASANT HILL, CA 94523

(415) 963-4303

MAIN FLOOR PLAN
PLUMBING
DEMOLITION

PROJ. NO.	2023-024
SCALE	AS NOTED
DATE	24 JUL 2023
PHASE	CD
DRAWN	CD, CG, HC
CHECKED	RL

NO.	DATE	REVISION
	24 JUL 2023	PERMIT SUBMITTAL

SHEET NO.
P-2.01

ALL DRAWINGS AND WRITTEN MATERIAL APPEARING HEREIN CONSTITUTE ORIGINAL AND UNPUBLISHED WORK OF THE ARCHITECT AND MAY NOT BE DUPLICATED, USED, OR DISCLOSED WITHOUT WRITTEN CONSENT OF THE ARCHITECT. COPYRIGHT 2023 GARAVAGLIA ARCHITECTURE, INC.

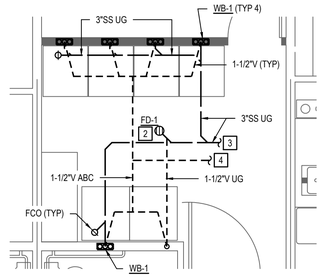

3 LAUNDRY SS&V ENLARGED PLAN

SCALE: 1/4" = 1'-0"

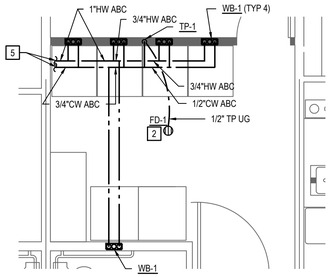

2 LAUNDRY H&CW ENLARGED PLAN

SCALE: 1/4" = 1'-0"

SHEET NOTES

1. REINSTALL (E) SINK IN NEW CABINET. PROVIDE AND INSTALL NEW FAUCET F-1, FLEXIBLE CONNECTIONS, HW & CW SHUT-OFF 1/4 TURN VALVES AND BRASS P-TRAPS/ARMS.
2. CONTRACTOR TO VERIFY THAT THERE IS A FLOOR DRAIN IN THE LAUNDRY ROOM AND IF THERE ISN'T ONE, ADD FD-1, TP-1 AND ASSOCIATED SS, V AND TP PIPES AS SHOWN.
3. CONTRACTOR TO SCAN SLAB FOR LOCATION, SIZE AND DEPTH OF (E) SS PIPES UNDER SLAB BEFORE BEGINNING WORK. CONNECT 3"SS TO (E) 3"SS MAIN IN ROOM. INFORM ARCHITECT AS SOON AS POSSIBLE IF (E) PIPES VARY SIGNIFICANTLY FROM SHOWN. SAWCUT SLAB AS REQUIRED AND AFTER INSTALLING PIPES BACKFILL AND POUR (N) CONCRETE TO MATCH (E).
4. CONTRACTOR TO LOCATE AND DETERMINE SIZE OF (E)V PIPING ABOVE CEILING BEFORE BEGINNING WORK. CONNECT 2"V TO (E) 2"V ABC AND INFORM ARCHITECT AS SOON AS POSSIBLE OF ANY ISSUES.
5. 4.CONTRACTOR TO LOCATE AND DETERMINE SIZE OF (E)H&CW PIPING ABOVE CEILING BEFORE BEGINNING WORK. CONNECT 3/4"CW AND 1"HW PIPING TO (E) PIPING ABC OF SAME OR GREATER SIZE AND INFORM ARCHITECT AS SOON AS POSSIBLE OF ANY ISSUES.

GARAVAGLIA ARCHITECTURE INC.

582 MARKET STREET
SUITE 1800
SAN FRANCISCO, CA 94104
T: 415.391.9633
F: 415.391.9647

www.garavaglia.com

1628 WEBSTER STREET

ALAMEDA, CALIFORNIA

CONVERSION TO
AFFORDABLE HOUSING

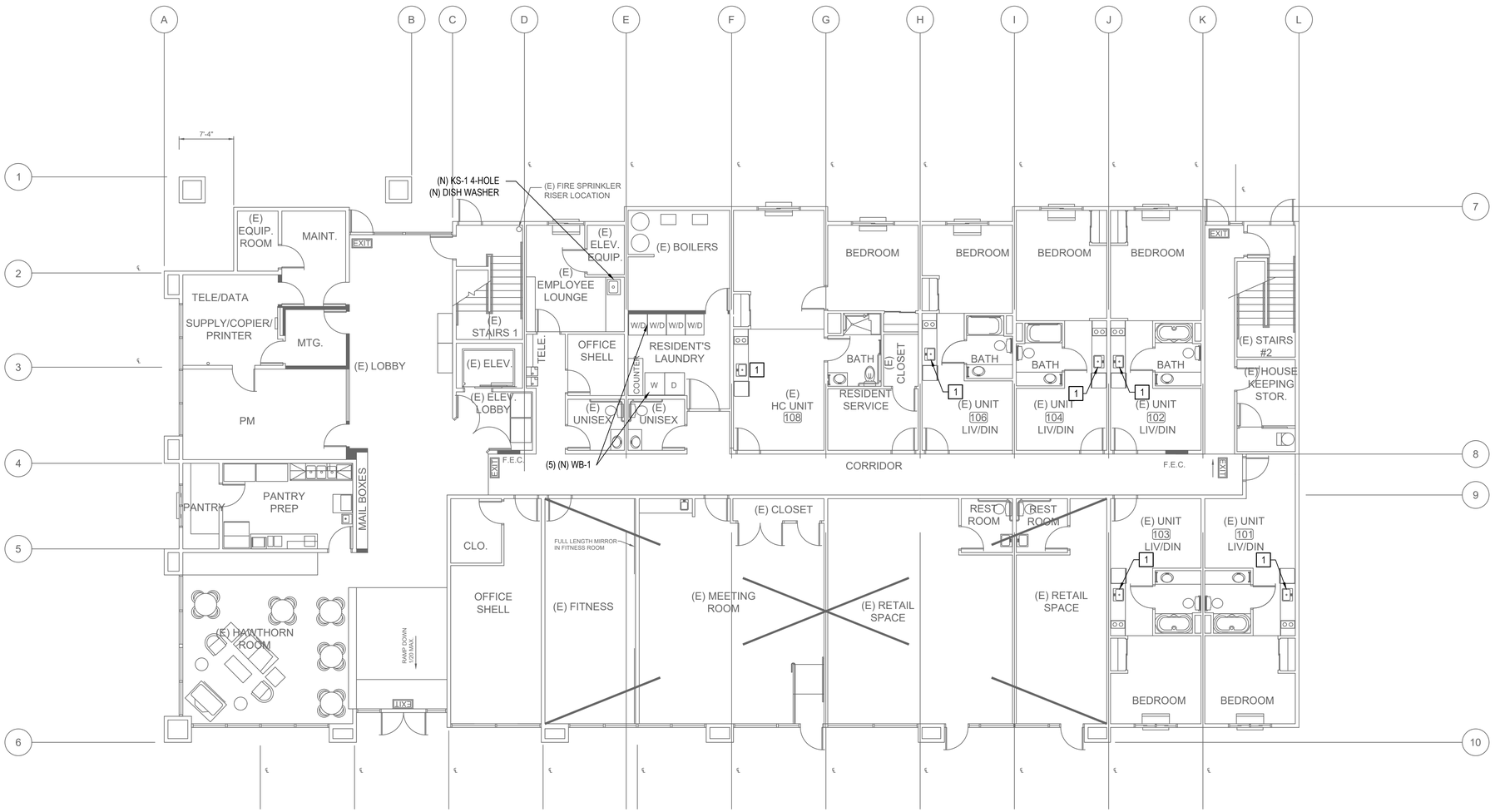

1 MAIN FLOOR PLUMBING PLAN PROPOSED

SCALE: 1/8" = 1'-0"

N

REGISTERED PROFESSIONAL ENGINEER
JAMES DYER
M25378
Exp: 9/30/2024
MECHANICAL
STATE OF CALIFORNIA

EDesignC Incorporated

ENGINEERING DESIGN COLLABORATIVE
582 MARKET STREET, SUITE 400
SAN FRANCISCO, CA 94104

212 9TH STREET, SUITE 203
OAKLAND, CA 94607

91 GREGORY LANE, SUITE 3
PLEASANT HILL, CA 94523

(415) 963-4303

MAIN FLOOR PLAN
PLUMBING
PROPOSED

PROJ. NO.	2023-024
SCALE	AS NOTED
DATE	24 JUL 2023
PHASE	CD
DRAWN	CD, CG, HC
CHECKED	RL

NO.	DATE	REVISION
	24 JUL 2023	PERMIT SUBMITTAL

SHEET NO.

P-2.11

ALL DRAWINGS AND WRITTEN MATERIAL APPEARING HEREIN CONSTITUTE ORIGINAL AND UNPUBLISHED WORK OF THE ARCHITECT AND MAY NOT BE DUPLICATED, USED, OR DISCLOSED WITHOUT WRITTEN CONSENT OF THE ARCHITECT. COPYRIGHT 2023 GARAVAGLIA ARCHITECTURE, INC.

SHEET NOTES

1. REINSTALL (E) SINK IN NEW CABINET. PROVIDE AND INSTALL NEW FAUCET F-1, FLEXIBLE CONNECTIONS, HW & CW SHUT-OFF 1/4 TURN VALVES AND BRASS P-TRAPS/ARMS.
2. REMOVE (E) SPA TUB AND PROVIDE (N) SH-1. ADJUST H&CW, SS AND V BRANCH CONNECTIONS AS REQUIRED TO MATCH (N) SHOWER.
3. REMOVE BATHROOM FIXTURES AND ACCESSORIES, REINSTALL IN RECONFIGURED BATHROOM. ADJUST H&CW, SS AND VENT BRANCH PIPES AS REQUIRED TO CONNECTED TO FIXTURES.

GARAVAGLIA ARCHITECTURE INC.

582 MARKET STREET
SUITE 1800
SAN FRANCISCO, CA 94104
T: 415.391.9633
F: 415.391.9647

www.garavaglia.com

1628 WEBSTER STREET

ALAMEDA, CALIFORNIA

CONVERSION TO
AFFORDABLE HOUSING

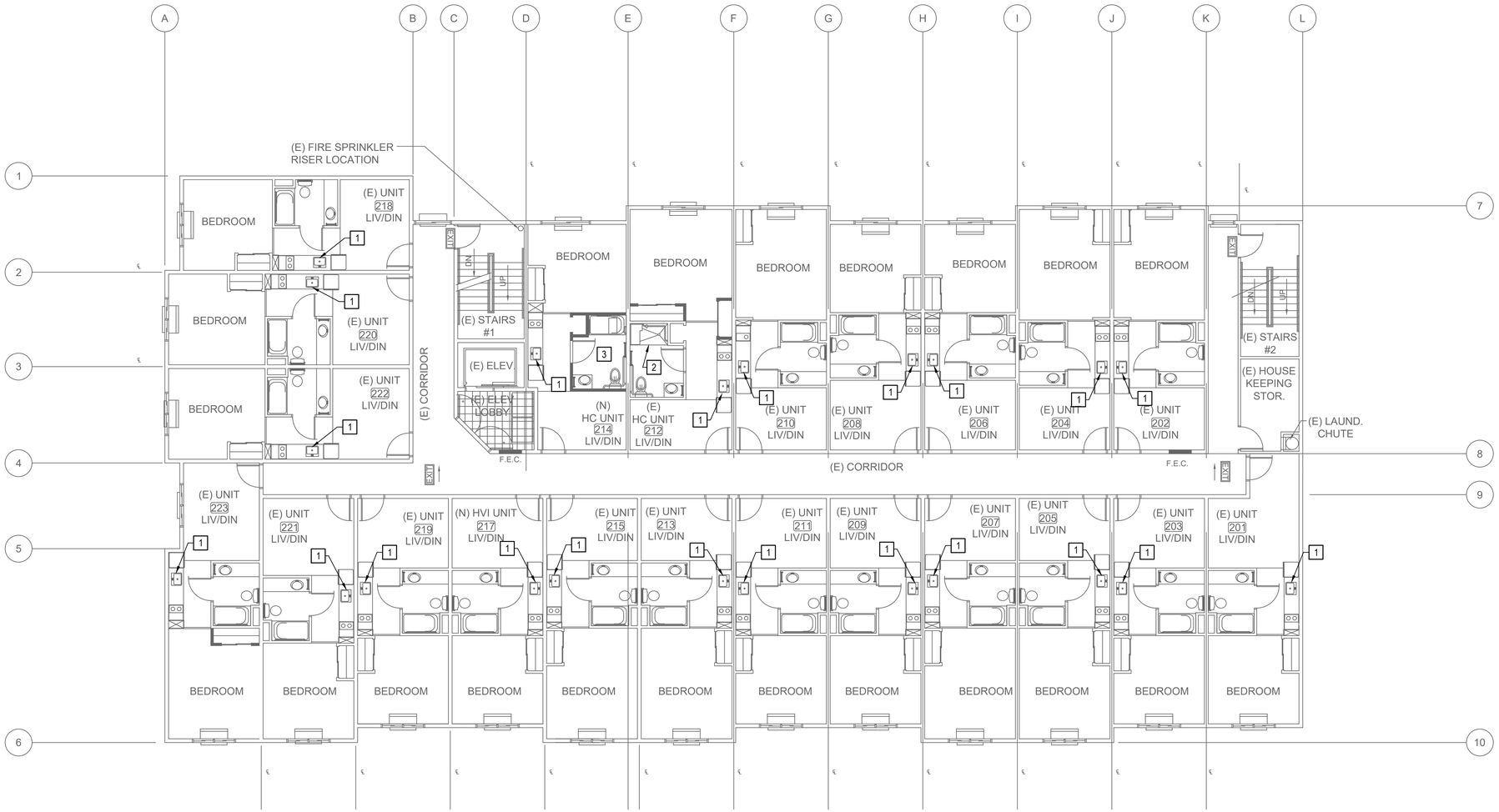

1 SECOND FLOOR PLUMBING PLAN PROPOSED

SCALE: 1/8" = 1'-0"

N

REGISTERED PROFESSIONAL ENGINEER JAMES DYER M25378 Exp: 9/30/2024 MECHANICAL STATE OF CALIFORNIA

EDesignC Incorporated

ENGINEERING DESIGN COLLABORATIVE
582 MARKET STREET, SUITE 400
SAN FRANCISCO, CA 94104

212 9TH STREET, SUITE 203
OAKLAND, CA 94607

91 GREGORY LANE, SUITE 3
PLEASANT HILL, CA 94523

(415) 963-4303

SECOND FLOOR PLAN

PLUMBING

PROPOSED

PROJ. NO.	2023-024
SCALE	AS NOTED
DATE	24 JUL 2023
PHASE	CD
DRAWN	CD, CG, HC
CHECKED	RL

NO.	DATE	REVISION
	24 JUL 2023	PERMIT SUBMITTAL

SHEET NO.

P-2.12

ALL DRAWINGS AND WRITTEN MATERIAL APPEARING HEREIN CONSTITUTE ORIGINAL AND UNPUBLISHED WORK OF THE ARCHITECT AND MAY NOT BE DUPLICATED, USED, OR DISCLOSED WITHOUT WRITTEN CONSENT OF THE ARCHITECT. COPYRIGHT 2023 GARAVAGLIA ARCHITECTURE, INC.

SHEET NOTES

1. REINSTALL (E) SINK IN NEW CABINET. PROVIDE AND INSTALL NEW FAUCET F-1, FLEXIBLE CONNECTIONS, HW & CW SHUT-OFF 1/4 TURN VALVES AND BRASS P-TRAPS/ARMS.
2. REMOVE BATHROOM FIXTURES AND ACCESSORIES, REINSTALL IN RECONFIGURED BATHROOM. ADJUST H&CW, SS AND VENT BRANCH PIPES AS REQUIRED TO CONNECTED TO FIXTURES.

GARAVAGLIA ARCHITECTURE INC.

582 MARKET STREET
SUITE 1800
SAN FRANCISCO, CA 94104
T: 415.391.9633
F: 415.391.9647

www.garavaglia.com

1628 WEBSTER STREET

ALAMEDA, CALIFORNIA

CONVERSION TO
AFFORDABLE HOUSING

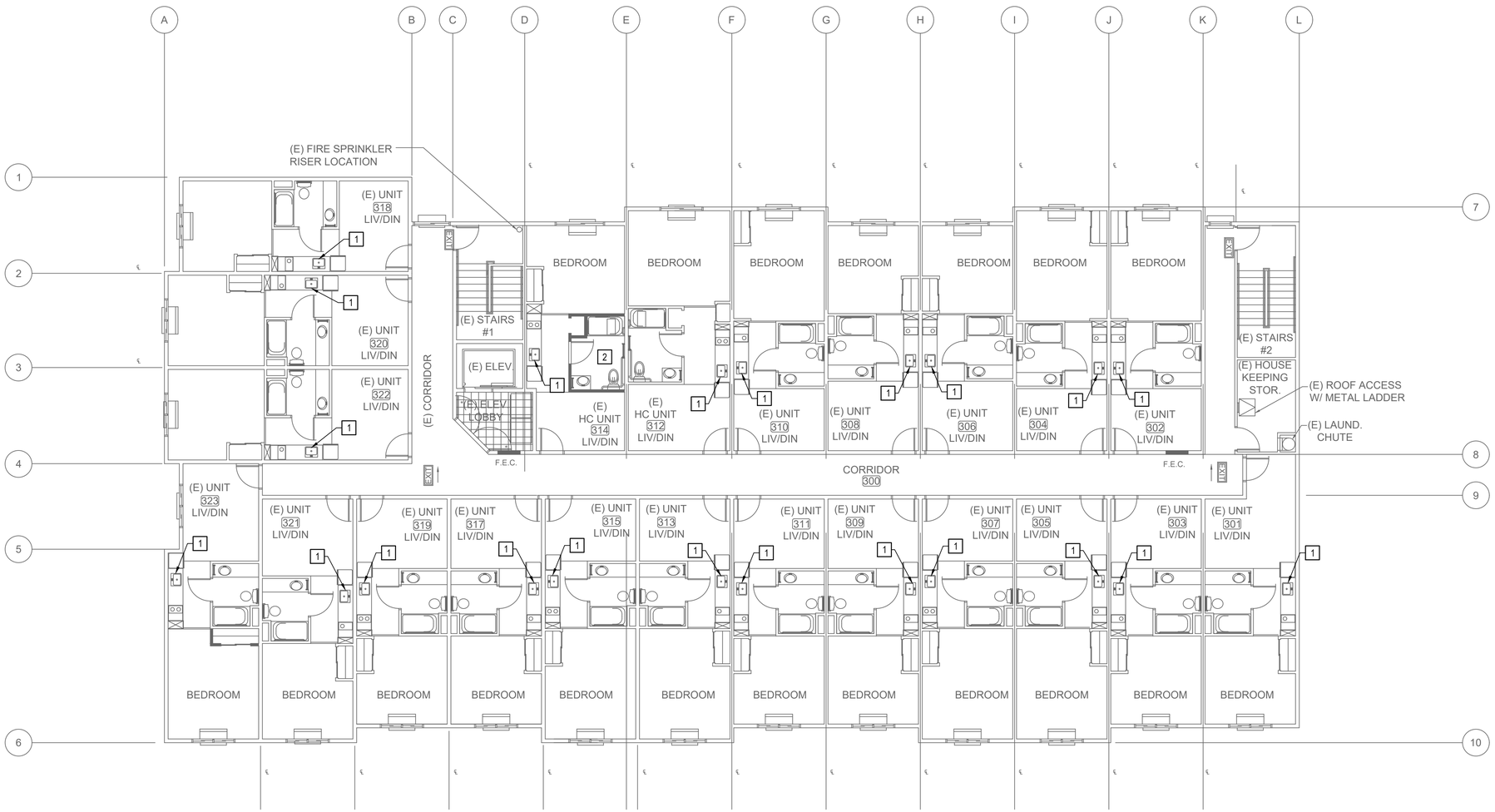

1 THIRD FLOOR PLUMBING PLAN PROPOSED

SCALE: 1/8" = 1'-0"

N

REGISTERED PROFESSIONAL ENGINEER
JAMES DYER
M25378
Exp: 9/30/2024
MECHANICAL
STATE OF CALIFORNIA

EDesignC Incorporated

ENGINEERING DESIGN COLLABORATIVE
582 MARKET STREET, SUITE 400
SAN FRANCISCO, CA 94104

212 9TH STREET, SUITE 203
OAKLAND, CA 94607

91 GREGORY LANE, SUITE 3
PLEASANT HILL, CA 94523

(415) 963-4303

THIRD FLOOR PLAN
PLUMBING
PROPOSED

PROJ. NO.	2023-024
SCALE	AS NOTED
DATE	24 JUL 2023
PHASE	CD
DRAWN	CD, CG, HC
CHECKED	RL

NO.	DATE	REVISION
	24 JUL 2023	PERMIT SUBMITTAL

SHEET NO.
P-2.13

ALL DRAWINGS AND WRITTEN MATERIAL APPEARING HEREIN CONSTITUTE ORIGINAL AND UNPUBLISHED WORK OF THE ARCHITECT AND MAY NOT BE DUPLICATED, USED, OR DISCLOSED WITHOUT WRITTEN CONSENT OF THE ARCHITECT. COPYRIGHT 2023 GARAVAGLIA ARCHITECTURE, INC.

SYMBOLS (NOT ALL USED)

GENERAL SYMBOLS

# / X	# = DETAIL NUMBER X = SHEET NUMBER
	DEMOLITION WORK
	MATCH LINE
	ENLARGED PLANS
	BRANCH CIRCUIT WIRING IN CONDUIT CONCEALED IN CEILING OR WALL.
	BRANCH CIRCUIT WIRING IN CONDUIT CONCEALED UNDER FLOOR OR UNDERGROUND.
	BRANCH CIRCUIT HOMERUN TO PANEL. CONCEALED IN CEILING SPACE OR WHERE POSSIBLE.
	REQUIRED WORKING CLEARANCE PER NEC 110.26.
X	LIGHT FIXTURE TAG (X = FIXTURE TYPE). REFER TO LIGHTING SCHEDULE.

POWER SYSTEM SYMBOLS

X	JUNCTION OR OUTLET BOX MOUNTED ABOVE CEILING WITH BLANK COVER. • X = JUNCTION BOX TYPE: CU = CONDENSING UNIT, EF = EXHAUST FAN, ERV = ENERGY RECOVERY VENTILATOR, FC = FAN COIL, KRH = KITCHEN RANGE HOOD, HP = HEAT PUMP, OAF = OUTSIDE AIR FAN, AND SF = SUPPLY FAN.
EV EV	1" CONDUIT HOMERUN TO PANEL EV FOR FUTURE EV CHARGING STATION AT EV CAPABLE SPACES, BOLLARD MOUNT OR WALL MOUNT.
$T	HORSEPOWER RATED TOGGLE SWITCH WITH THERMAL OVERLOADS.
	FUSED DISCONNECT SWITCH WITH DUAL ELEMENT FUSED (UON).
X	DUPLEX RECEPTACLE 20A, 125V, 3WG, NEMA 5-20R, +15" (UON). NEW INTERIOR RECEPTACLES SHALL BE TAMPER RESISTANT TYPE. REFER TO PANEL SCHEDULES FOR AFCI TYPE RECEPTACLE APPLICATION. • X = RECEPTACLE TYPE: WP = GFCI AND WEATHERPROOF WITH IN-USE COVER, D = DEDICATED, GFCI = WITH GROUND FAULT CIRCUIT INTERRUPTER, AND OS = OCCUPANCY SENSOR CONTROLLED.
GFCI	DUPLEX RECEPTACLE 20A, ABOVE COUNTER OR +42" AFF, UON. (WP = WEATHERPROOF, GFCI = WITH GROUND FAULT CIRCUIT INTERRUPTER)
GFCI	DOUBLE DUPLEX RECEPTACLE (2) NEMA 5-20R, WITH GROUND FAULT CIRCUIT INTERRUPTER, ABOVE COUNTER.
	DUPLEX RECEPTACLE, 20A, FLUSH MOUNTED FLOOR BOX. NEW INTERIOR RECEPTACLES SHALL BE TAMPER RESISTANT TYPE. REFER TO PANEL SCHEDULES FOR AFCI TYPE RECEPTACLE APPLICATION.
	QUADPLEX RECEPTACLE NEMA 5-20R , FLUSH MOUNTED FLOOR BOX. NEW INTERIOR RECEPTACLES SHALL BE TAMPER RESISTANT TYPE. REFER TO PANEL SCHEDULES FOR AFCI TYPE RECEPTACLE APPLICATION.
	DOUBLE DUPLEX RECEPTACLE (2) NEMA 5-15R.
	DOUBLE DUPLEX RECEPTACLE (2) NEMA 5-20R, SPLIT-WIRED, WITH GROUND FAULT CIRCUIT INTERRUPTER.
	204V OR 208V RECEPTACLE OR OUTLET. COORDINATE ELECTRICAL CONNECTION WITH FINAL EQUIPMENT SELECTION.
	PANELBOARD: 120/240V, 1 PHASE, 3 WIRE SURFACE MOUNTED; 120/208V, 3 PHASE, 4 WIRE FLUSH/SURFACE MOUNTED.
DC	DOORBELL CHIME. PROVIDE SINGLE GANG BOX WITH 120V POWER.
	DOOR BELL PUSH BUTTON. ROUTE 20 AWG, 2-CONDUCTOR TO CHIME LOCATION.

LIGHTING CONTROLS SYSTEM SYMBOLS

a,b D#	LOW VOLTAGE DIMMER SWITCH FOR MULTIPLE ZONES. (# = NUMBER OF CONTROLLED ZONE AND a,b = ZONE)
X $ $	SINGLE POLE SWITCH AND BOX WITH STANDARD MANUAL ON / OFF IN COMBINATION OF SWITCH TYPE LISTED BELOW, WALL MOUNTED, +48" AFF TO THE TOP OF THE BOX, UON. • X = SWITCH TYPE: BLANK = MANUAL ON / OFF ONLY, 3 = THREE-WAY, D = DIMMER, OS = OCCUPANCY SENSOR, VS = VACANCY SENSOR, AND WP = WEATHERPROOF.
OSD VSD $ $	SINGLE POLE SWITCH AND BOX WITH LIGHTING SENSOR AND DIMMING CAPABILITY, WALL MOUNTED, +48" AFF TO THE TOP OF THE BOX, UON. • SWITCH TYPE: OSD = OCCUPANCY SENSOR WITH DIMMER, AND VSD = VACANCY SENSOR WITH DIMMER.
3a,b $	THREE-WAY SWITCH WITH DIMMING CAPABILITY, WALL MOUNTED, +48" AFF TO THE TOP OF THE BOX, UON. • a,b = CONTROLLED ZONE (ONLY APPLICABLE TO THREE-WAY SWITCH).
OS VS	LIGHTING SENSOR, CEILING MOUNTED. OS = CONFIGURE FOR OCCUPANCY AND VS = CONFIGURE FOR VACANCY.
OS VS	LIGHTING SENSOR, WALL MOUNTED. OS = CONFIGURE FOR OCCUPANCY AND VS = CONFIGURE FOR VACANCY.

FIRE ALARM SYSTEM SYMBOLS

	FIRE ALARM SYSTEM SMOKE DETECTOR, CEILING MOUNTED.
SA SA CO	120V SMOKE ALARM WITH BATTERY BACKUP. (CO = CARBON MONOXIDE)
#	FIRE ALARM HORN STROBE DEVICE, CEILING MOUNTED, ACTIVATED BY BUILDING SYSTEM. (# = CANDELA RATING)
S	FIRE ALARM STROBE DEVICE CONNECTED WITH RELAY BREAK TO SMOKE ALARM AND BUILDING SYSTEM FOR VISUAL NOTIFICATION. (FOR ADA ONLY)
#	FIRE ALARM HORN STROBE DEVICE ACTIVATED BY BUILDING SYSTEM. (# = CANDELA RATING)
F	MANUAL PULL STATION, WALL MOUNTED.

SCOPE OF WORK

1. POWER SYSTEM:
   - F/I NEW PANELS AT EACH FLOOR FOR UNIT COOKTOP AND KITCHEN RANGE HOOD.
   - ROUTE NEW POWER THROUGH CORRIDOR CEILING INTO EACH UNIT. NO EXPOSED CONDUIT.
3. LIGHTING SYSTEM:
   - F/I NEW INTERIOR LED LIGHTING FIXTURES AND T24 CONTROLS IN NEW ROOMS.
4. FIRE ALARM SYSTEM: **(DEFERRED PERMIT SUBMITTAL BY CONTRACTOR)**
   - REFER TO DEFERRED FIRE ALARM SUBMITTAL.
   - DEVICE CHANGES FOR NEW ROOMS

TITLE 24 REQUIREMENTS

PROJECT COMPLIES FROM THE FOLLOWING COMPLIANCE FORMS:

1. NRCC-LTI-E - INDOOR LIGHTING
   - PROVIDED BY EDESIGNC, SEE TITLE 24 SHEETS.

APPLICABLE CODES

1. 2022 BUILDING STANDARD ADMINISTRATIVE CODE, PART 1, TITLE 24 C.C.R.
2. 2022 CALIFORNIA BUILDING CODE (CBC), PART 2, TITLE 24 C.C.R.
3. 2022 CALIFORNIA ELECTRICAL CODE (CEC), PART 3, TITLE 24 C.C.R.
4. 2022 CALIFORNIA MECHANICAL CODE (CMC), PART 4, TITLE 24 C.C.R.
5. 2022 CALIFORNIA PLUMBING CODE (CPC), PART 5, TITLE 24 C.C.R.
6. 2022 CALIFORNIA ENERGY CODE, PART 6, TITLE 24 C.C.R.
7. 2022 CALIFORNIA FIRE CODE (CFC), PART 9, TITLE 24, C.C.R.
9. 2022 CALIFORNIA EXISTING BUILDING CODE, PART 10, TITLE 24 C.C.R.
10. 2022 CALIFORNIA "GREEN" BUILDING REQUIREMENTS, PART 11, TITLE 24 C.C.R.
11. 2022 CALIFORNIA REFERENCED STANDARDS CODE, PART 12, TITLE 24, C.C.R.
12. TITLE 19, C.C.R., PUBLIC SAFETY, STATE FIRE MARSHAL REGULATIONS

NFPA 13, AUTOMATIC SPRINKLER SYSTEM, 2022 EDITION
NFPA 14, STANDPIPE AND HOSE SYSTEMS, 2022 EDITION
NFPA 72, NATIONAL FIRE ALARM CODE, 2022 EDITION
LOCAL MUNICIPAL BUILDING CODES

ABBREVIATIONS

(E)	EXISTING TO REMAIN	FC	FAN COIL	PB	PULL BOX
(F)	FUTURE	FSD	FIRE SMOKE DAMPER	PH, ϕ	PHASE
(N)	NEW	G	GROUNDING CONDUCTOR	PNL	PANEL
(RR)	REMOVE AND RELOCATE	GFI	GROUND FAULT INTERRUPTER	POS	POINT OF SALE
A	AMPERE	GFCI	GROUND FAULT CIRCUIT INTERRUPTER	RSC	RIGID STEEL CONDUIT
AC	ALTERNATING CURRENT	GND	GROUND	S.A.D.	SEE ARCHITECTURAL DRAWINGS
ADA	AMERICANS WITH DISABILITIES ACT	HP	HORSEPOWER	S.A.V.D.	SEE AUDIO/VISUAL DRAWINGS
AF	AMPERE RATING OF FUSE	HVI	HEARING AND VISUALLY IMPAIRED	S.C.D.	SEE CIVIL DRAWINGS
AFCI	ARC FAULT CIRCUIT INTERRUPTER	IWH	INSTANT WATER HEATER	S.L.D.	SEE LANDSCAPE DRAWINGS
AFF	ABOVE FINISHED FLOOR	JB	JUNCTION BOX	S.L.D.G.	SINGLE LINE DIAGRAM
AFG	ABOVE FINISHED GRADE	kVA	KILOVOLT AMPS	S.M.D.	SEE MECHANICAL DRAWINGS
AV	AUDIO/VISUAL	kW	KILOWATTS	S.P.D.	SEE PLUMBING DRAWINGS
BS	BRANCH SELECTOR	LC	LOAD CENTER	SLD	SINGLE LINE DIAGRAM
C	CONDUIT	LF	LOW FREQUENCY	SPEC	SPECIFICATION
CKT	CIRCUIT	LTG	LIGHTING	T	TELEPHONE
CO	CARBON MONOXIDE	LTS	LIGHTS	TYP	TYPICAL
CU	CONDENSING UNIT	LV	LOW VOLTAGE	TV	TELEVISION
D/G	DISHWASHER AND GARBAGE DISPOSAL	MC	MEDIA CABINET	UG	UNDERGROUND
D	DEDICATED	MECH	MECHANICAL	UAC	UNDER ANOTHER CONTRACT
DIM	DIMMABLE	MTD	MOUNTED	UON	UNLESS OTHERWISE NOTED
EC	ELECTRICAL CONTRACTOR	M/V	MEDIUM VOLTAGE	V	VOLT
EF	EXHAUST FAN	N	NEUTRAL	VP	VANDAL PROOF
ELEC	ELECTRICAL	N.E.C.	NATIONAL ELECTRICAL CODE	VS	VACANCY SENSOR
EM	EMERGENCY	NEMA	NATIONAL ELECTRICAL MANUFACTURERS ASSOCIATION	VSD	VACANCY SENSOR WITH DIMMER
EMT	ELECTRICAL METALLIC TUBING			W	WATTS
ENT	ELECTRICAL NONMETALLIC TUBING	NEUT	NEUTRAL	WAP	WIRELESS ACCESS POINT
EV	ELECTRIC VEHICLE	NIC	NOT IN CONTRACT	WP	WEATHERPROOF (NEMA 3R)
EVSE	ELECTRIC VEHICLE SUPPLIED EQUIPMENT	NTS	NOT TO SCALE	WT	WATERTIGHT
F/I	FURNISH AND INSTALL	OS	OCCUPANCY SENSOR	XFMR	TRANSFORMER
FACP	FIRE ALARM CONTROL PANEL	OSD	OCCUPANCY SENSOR WITH DIMMER		
FATC	FIRE ALARM TERMINAL CAN	P	POLE		

SHEET INDEX

E-0.00	ELECTRICAL TITLE SHEET
E-0.01	ELECTRICAL NOTES
E-1.01	SITE PLAN ELECTRICAL
E-2.11	MAIN FLOOR PLAN ELECTRICAL PROPOSED
E-2.12	SECOND FLOOR ELECTRICAL PROPOSED
E-2.13	THIRD FLOOR ELECTRICAL PROPOSED
E-3.01	SINGLE LINE DIAGRAM
E-4.11	MAIN FLOOR PLAN LIGHTING PROPOSED
E-9.00	ELECTRICAL DETAIL
E-T24.1	TITLE 24 FORMS
E-T24.2	TITLE 24 FORMS

GARAVAGLIA ARCHITECTURE INC.
582 MARKET STREET
SUITE 1800
SAN FRANCISCO, CA 94104
T: 415.391.9633
F: 415.391.9647
www.garavaglia.com

1628 WEBSTER STREET
ALAMEDA, CALIFORNIA

CONVERSION TO
AFFORDABLE HOUSING

REGISTERED PROFESSIONAL ENGINEER
ROSANNA LEPKA
E15977
Exp: 6/30/2025
ELECTRICAL
STATE OF CALIFORNIA

EDesignC Incorporated
ENGINEERING DESIGN COLLABORATIVE
582 MARKET STREET, SUITE 400
SAN FRANCISCO, CA 94104
212 9TH STREET, SUITE 203
OAKLAND, CA 94607
91 GREGORY LANE, SUITE 3
PLEASANT HILL, CA 94523
(415) 963-4303

ELECTRICAL
TITLE SHEET

PROJ. NO.	2023-024
SCALE	AS NOTED
DATE	24 JUL 2023
PHASE	CD
DRAWN	CD, CG, HC
CHECKED	RL

NO.	DATE	REVISION
	24 JUL 2023	PERMIT SUBMITTAL

SHEET NO.
E-0.00

ALL DRAWINGS AND WRITTEN MATERIAL APPEARING HEREIN CONSTITUTE ORIGINAL AND UNPUBLISHED WORK OF THE ARCHITECT AND MAY NOT BE DUPLICATED, USED, OR DISCLOSED WITHOUT WRITTEN CONSENT OF THE ARCHITECT.
COPYRIGHT 2023 GARAVAGLIA ARCHITECTURE, INC.

GENERAL NOTES

1. ALL WORK IS TO BE PERFORMED IN STRICT COMPLIANCE WITH THE NATIONAL ELECTRIC CODE, STATE LAWS, AND ALL OTHER REGULATIONS GOVERNING WORK OF THIS NATURE.
2. CONTRACTOR SHALL FAMILIARIZE HIMSELF WITH THE EXISTING JOB CONDITION. HE SHALL EXAMINE CONSTRUCTION DRAWINGS AND SPECIFICATIONS AND SHALL HAVE HAD VISITED THE CONSTRUCTION SITE, PRIOR TO SUBMITTING HIS BID PROPOSAL. HE SHALL BE FAMILIAR WITH THE EXISTING CONDITIONS UNDER WHICH HE WILL HAVE TO OPERATE AND WHICH WILL IN ANY WAY AFFECT THE WORK UNDER THIS CONTRACT. NO SUBSEQUENT ALLOWANCE WILL BE MADE IN THIS CONNECTION IN BEHALF OF THE CONTRACTOR FOR ANY ERROR OR NEGLIGENCE ON HIS PART. DETERMINE THE SEQUENCE OF CONSTRUCTION THROUGHOUT THE PROJECT, INCLUDING TEMPORARY FACILITIES AND CONNECTIONS REQUIRED FOR THE DURATION OF THE PROJECT.
3. THE CONTRACTOR SHALL SECURE ALL PERMITS OR APPLICATIONS, AND PAY ANY AND ALL FEES AS REQUIRED.
4. EXISTING ARCHITECTURAL SURFACES DISTURBED DURING CONSTRUCTION SHALL BE PATCHED AND PAINTED TO MATCH EXISTING.
5. WORK SHOWN IN THESE PLANS ARE NEW, UON. INSTALLATION SHALL BE CONCEALED. WHERE NOT POSSIBLE, CONTRACTOR SHALL OBTAIN APPROVAL FROM ARCHITECT AND ENGINEER FOR EXPOSED INSTALLATION. A WRITTEN APPROVAL IS REQUIRED. USE SURFACE RACEWAYS, WIREMOLD, OR EQUAL. ALL ELECTRIC MATERIALS, DEVICES, AND EQUIPMENT FOR THE PROJECT SHALL BE NEW AND U.L. APPROVED
6. ALL CONDUIT SHALL BE 3/4" MINIMUM. ALL CONDUIT SHALL BE RUN PARALLEL TO EXISTING SURFACES. WHEN CONDUIT CROSSES CORRIDORS OR ROOMS IT SHALL BE DONE PERPENDICULAR TO WALLS.
7. PAINT ALL SURFACE MOUNTED CONDUITS AND FITTINGS TO MATCH ADJACENT SURFACE. CONFIRM COLOR WITH OWNER.
8. ALL EXPOSED CONDUITS SHALL BE MOUNTED WITH 2-HOLE STRAPS.
9. CONDUIT CONNECTORS SHALL BE COMPRESSION TYPE.
10. SEAL ALL CONDUIT PENETRATIONS THROUGH FIRE RATED WALLS. FURNISH AND INSTALL FIRE RATED BACKBOXES AS REQUIRED TO MAINTAIN FIRE RATING OF CEILING OR WALLS WHERE RECESSED ELECTRIC EQUIPMENT SUCH AS LIGHT FIXTURES, SWITCHES, RECEPTACLES, PANEL, ETC. ARE INSTALLED IN RATED WALL OR CEILINGS. PENETRATIONS OF FIRE RATED WALLS, CEILINGS, OR FLOORS SHALL COMPLY WITH CBC CHAPTER 7 REQUIREMENTS. IN WALLS AND PARTITIONS THAT ARE FOR FIRE RESISTIVE CONSTRUCTION, OPENINGS FOR STEEL ELECTRICAL OUTLET BOXES SHALL NOT EXCEED 16 SQUARES INCHES. IN ADDITION, THE AGGREGATE AREA OF SUCH OPENING SHALL NOT EXCEED 100 SQUARE INCH FOR ANY 100 SQUARE FEET OF WALL OR PARTITION. OUTLET BOXES ON OPPOSITE SIDES OF THE WALLS OR PARTITION SHALL BE SEPARATED BY A HORIZONTAL DISTANCE OF AT LEAST 24 INCHES, OR BE PROVIDED WITH FIRE PUTTY.
11. ALL NEW WIRING SHALL BE IN CONDUIT. COORDINATE ROUTING OF CONDUIT WITH ARCHITECT AND STRUCTURAL FOR OPENINGS IN WALLS AND ANY NOTCHING OF JOISTS.
12. THE ELECTRICAL PLANS ARE SCHEMATIC IN NATURE AND ARE NOT INTENDED TO SHOW ALL OF THE ARCHITECTURAL DETAILS OR SPECIFICS OF ELECTRICAL CONSTRUCTION. TAKE ALL DIMENSIONS FROM THE ARCHITECTURAL DRAWINGS. BEFORE ROUGH-IN, VERIFY ALL MOUNTING HEIGHTS AND EXACT LOCATIONS FOR ALL EQUIPMENT ELECTRICAL CONNECTIONS, STUB-UPS, RECEPTACLES, OUTLETS, CONDUIT RUNS, ETC. WITH ARCHITECT AND OWNER. PLACE DEVICES LOCATED ABOVE COUNTERS, SHELVING, ETC. AND IN BATHROOMS SO AS NOT TO CONFLICT WITH EDGES OF WAINSCOTING, COUNTER SPLASH, SHELVING, ETC. ARCHITECTURAL SHEETS SHALL GOVERN. SEE ELECTRICAL SECTION OF ARCHITECTURAL SPECIFICATION FOR ADDITIONAL INFORMATION.
13. PULLROPES: ANY RACEWAY WITHOUT CABLE OR WIRE SHALL BE INSTALLED WITH MINIMUM 200 POUND TEST PULL LINE AND LARGER.
14. ALL DEVICES AND EQUIPMENT INSTALLED OUTDOORS OR EXPOSED TO THE WEATHER SHALL BE OF WEATHERPROOF CONSTRUCTION. ALL WALL PENETRATIONS TO EXTERIOR WALLS SHALL BE SEALED WATER TIGHT.
15. ALL EQUIPMENT SHALL BE LISTED AND LABELED BY A NATIONALLY RECOGNIZED TESTING LABORATORY AND SHALL BE INSTALLED AS PER LISTING OR LABELING (I.E. MAXIMUM FUSE SIZE MEANS FUSE PROTECTION IS REQUIRED).
16. ALL EQUIPMENT MANUFACTURERS SHALL BE NOTED IN DRAWINGS. SUBSTITUTIONS ARE PERMITTED BUT MUST BE APPROVED EQUAL.
17. CONNECTIONS TO MECHANICAL EQUIPMENT SHALL BE MADE WITH A MINIMUM OF 24" OF WEATHERPROOF FLEXIBLE CONDUIT TO PREVENT SOUND AND VIBRATION TRANSMISSION TO THE STRUCTURE. COORDINATE ALL MOTOR OVERLOADS AND/OR FUSES FURNISHED BY THIS CONTRACT WITH THE ACTUAL EQUIPMENT INSTALLED. SIZE OVERLOADS BASED ON MOTOR NAMEPLATE FULL LOAD CURRENT AND SERVICE FACTOR. FUSES FOR MOTOR AND TRANSFORMER CIRCUITS SHALL BE DUAL ELEMENT. FUSES FOR OTHER "NON-INRUSH" LOADS SHALL BE FAST ACTING. ALL FUSES SHALL BE CURRENT LIMITING CLASS RK5 OR CLASS L, UON. CONTRACTOR SHALL COORDINATE WITH ALL TRADES FOR MANUFACTURER INSTALLATION REQUIREMENTS.
18. SEE MECHANICAL AND PLUMBING DRAWINGS FOR LOCATION OF FANS AND WATER HEATERS.
19. ALL ELECTRICAL WORK SHALL BE COORDINATED WITH THE MECHANICAL WORK AS CALLED FOR IN MECHANICAL SPECIFICATIONS.
20. GROUNDING CONDUCTORS ARE GENERALLY NOT SHOWN. GROUND AND BOND ALL EQUIPMENT, RACEWAYS, MOTORS, PANELBOARDS AND SWITCHBOARDS, ETC. IN ACCORDANCE WITH NEC ARTICLE 250.
21. FIELD MOUNTED DEVICES SUCH AS SWITCHES, MOTOR STARTERS, RECEPTACLES, ETC., ARE SHOWN IN THEIR APPROXIMATE LOCATION. SWITCH MOUNTING HEIGHT SHALL BE 48" ABOVE FINISHED FLOOR AND RECEPTACLE MOUNTING HEIGHT SHALL BE 18" ABOVE FINISHED FLOOR. CONTRACTOR SHALL COORDINATE WITH ALL TRADES FOR MANUFACTURER INSTALLATION REQUIREMENTS.
22. ELECTRICAL CONTRACTOR TO PROVIDE EXPANSION FITTINGS AT ALL EXPANSION JOINT LOCATION. USE STEEL FLEX 6 FEET EACH SIDE OF THE JOINT AND TERMINATE IN A PULLBOX AT EACH END, OR OTHER APPLIED METHODS.
23. ALL LIGHTING FIXTURE LOCATIONS AND ROUTING SHALL BE REVIEWED BY ARCHITECT PRIOR TO ROUGH-IN.
24. ALL ELECTRICAL EQUIPMENT SHALL BE INSTALLED TO MAINTAIN A MINIMUM OF 36" CLEARANCE PER NEC ARTICLE 110.26.
25. PENETRATIONS OF FIRE RATED WALLS CEILINGS OR FLOORS SHALL COMPLY WITH CBC CHAPTER 7 REQUIREMENTS.
26. WHERE OUTLET BOXES ARE INSTALLED WITHIN RATED ASSEMBLIES, PROVIDE 3M MOLDABLE PUTTY PADS OR EQUAL TO MAINTAIN FIRE RATED ASSEMBLIES.
27. ALL RECEPTACLES SHALL BE GROUNDING TYPE.
28. ALL RECEPTACLES INSTALLED IN BATHROOMS AND KITCHENS SHALL HAVE GROUND-FAULT CIRCUIT INTERRUPTER PROTECTION AS REQUIRED BY THE NATIONAL ELECTRIC CODE.
29. CONTRACTOR TO CONFIRM EXACT LOCATION OF METERS WITH ELECTRIC UTILITY.
30. SUBMIT TO THE OWNER CERTIFICATES OF INSPECTIONS IN DUPLICATE FROM AN APPROVED INSPECTION AGENCY UPON COMPLETION.
31. PERFORMANCE AND WITNESSING OF TESTS:
    A. THE CONTRACTOR SHALL FURNISH ALL INSTRUMENTS AND QUALIFIED PERSONNEL OR FIRM TO PERFORM ALL REQUIRED TESTS.
    B. ALL NEW AND RECONNECTED ELECTRICAL CIRCUIT SHALL BE TESTED TO INSURE CIRCUIT CONTINUITY, INSULATION RESISTANCE, PROPER SPLICING AND GROUNDING IN ACCORDANCE WITH THE LATEST STANDARDS AS STATED ABOVE. BEFORE CONNECTING POWER CABLES TO MOTORS, THE INSULATION RESISTANCE OF ALL MOTOR WINDINGS SHALL BE TESTED IN ACCORDANCE WITH THE ABOVE STANDARDS.
    C. ANY CONTRACTOR FURNISHED AND/OR INSTALLED SPLICE, RECOMMENDED VOLTAGE AND INSULATION RESISTANCE TESTS, SHALL BE CONNECTED OR REPLACED BY THE CONTRACTOR AT HIS EXPENSE.
    D. NO EQUIPMENT SHALL BE ENERGIZED UNTIL ALL TESTS AND ADJUSTMENTS HAVE BEEN MADE.
    E. THREE COPIES OF ALL TEST RESULTS SHALL BE DELIVERED TO THE OWNER.
32. IN DOUBLE-STUD PARTITIONS, CONDUIT SHOULD NOT BRIDGE STUD ROWS. CONDUIT SHOULD BE ROUTED ONLY IN THE STUDS ON THE SIDE OF THE UNIT SERVED AND SHOULD NOT BE PLACED IN THE GAP BETWEEN STUD ROWS.
33. OUTLET BOXES ON OPPOSITE SIDES OF DEMISING PARTITIONS SHOULD BE SEPARATED BY AT LEAST 16 INCHES AND PROVIDE BACKING EQUIVALENT TO LOWRY'S OUTLET BOX PADS. WHEN ELECTRICAL BOXES MUST BE BACK-TO-BACK OR LESS THAN 16" OF EACH OTHER, INSTALL GYPSUM BOARD CENTERED VERTICALLY TO BOX FROM STUD TO STUD.
34. DO NOT ALLOW ELECTRICAL CONDUIT OR BOXES TO COME INTO CONTACT WITH PLUMBING.

DEFERRED FIRE ALARM SUBMITTAL

SYSTEM APPROVAL

THE CONTRACTOR IS RESPONSIBLE FOR SUBMITTING A COMPLETE SET OF MATERIALS TO THE LOCAL FIRE AND/OR BUILDING DEPARTMENT FOR DEFERRED APPROVAL. THIS SUBMITTAL IS TO INCLUDE ALL ITEMS LISTED IN THE SUBMITTALS SECTION. IN ADDITION, THE CONTRACTOR IS RESPONSIBLE FOR THE COMPLETE POINT TO POINT, DEVICES, BATTERIES, ANY NECESSARY APPLICATIONS AND FEES. CONSULT WITH THE LOCAL AHJ FOR EXACT REQUIREMENTS.

EXISTING FIRE ALARM CONTROL PANEL IS HARRINGTON BRAND. FIRE ALARM SYSTEM IS MANUAL SYSTEM WITH PULL STATIONS ALONG EGRESS PATHS WITH NOTIFICATION IN COMMON AND UNITS. UNITS TO BE FIELD CONFIRMED TO HAVE 75DB IN SLEEPING AREAS.

SYSTEM PERFORMANCE REQUIREMENTS

1. FURNISH AND INSTALL HORN-STROBES IN COMMON BUILDING AREAS, EXTERIOR, ACCESSIBLE ROOF DECKS, AND CORRIDORS.
2. FURNISH AND INSTALL SYSTEM SMOKE DETECTORS IN ALL EGRESS PATHWAYS INCLUDING BUT NOT LIMITED TO CORRIDORS, STAIRWELLS, AND ELEVATOR LOBBIES.
3. FURNISH AND INSTALL ASPIRATING SMOKE DETECTORS AT THE TOP OF ELEVATOR SHAFTS.
4. FURNISH AND INSTALL CONTROL AND MONITORING MODULES FOR ELEVATOR INTERFACE AND ELEVATOR RECALL.
5. FURNISH AND INSTALL MONITORING MODULES FOR TWO-WAY COMMUNICATION SYSTEM.
6. FURNISH AND INSTALL MONITORING MODULES FOR ERRCS IF REQUIRED FOR BUILDING.
7. FURNISH AND INSTALL MONITORING MODULES FOR FIRE SPRINKLER SYSTEM MONITOR.ING INCLUDING STANDPPES, AUTOMATIC SPRINKLER VALVES, PIV, BACK FLOW PREVENTERS, AND THE FIRE PUMP.
8. FURNISH AND INSTALL FIRE ALARM ANNUNCIATORS AS NOTED ON PLANS.
9. COORDINATE WITH OWNER FOR MONITORING SERVICE AND PHONE LINES.
10. CLOSELY COORDINATE WITH MECHANICAL FOR FIRE SMOKE DAMPERS AND DUCT DETECTORS FOR SHUTDOWN WHERE REQUIRED.
11. CLOSELY COORDINATE WITH ARCHITECTURAL FOR HOLD OPEN.
12. FURNISH AND INSTALL MONITORING MODULE FOR ROOF ELECTRICAL ROOM EXHAUST FAN.

SUBMITTALS

CONTRACTOR SHALL WITHIN TWO WEEKS OF NOTICE TO PROCEED SUBMIT THE FOLLOWING FOR THE ELECTRICAL ENGINEER'S REVIEW AND CONCURRENT APPROVAL BY THE AHJ.

1. PRODUCT DATA: PROVIDE DATA CUT SHEETS SHOWING ELECTRICAL CHARACTERISTICS AND CONNECTION REQUIREMENTS OF FIRE ALARM DEVICES.
2. PROVIDE CALIFORNIA STATE FIRE MARSHAL (CSFM) LISTING OF FIRE ALARM DEVICES.
3. INSTALLER NATIONAL INSTITUTE FOR CERTIFICATION IN ENGINEERING TECHNOLOGIES (NICET) LEVEL II CERTIFICATION.
4. SHOP DRAWINGS SHOWING THE FOLLOWING:
    A. DEVICE, CONDUITS, AND WIRING CONNECTION REQUIRED.
    B. INTERCONNECTION TO THE FIRE SPRINKLER SYSTEM VIA FLOW AND TAMPER SWITCHES.
5. MANUFACTURER'S INSTALLATION INSTRUCTIONS: INDICATE APPLICATION CONDITIONS AND LIMITATIONS OF USE STIPULATED BY PRODUCT TESTING AGENCY. INCLUDE INSTRUCTIONS FOR STORAGE, HANDLING, PROTECTION, EXAMINATION, PREPARATION, INSTALLATION AND STARTING OF PRODUCTS.

GARAVAGLIA ARCHITECTURE INC.

582 MARKET STREET
SUITE 1800
SAN FRANCISCO, CA 94104
T: 415.391.9633
F: 415.391.9647

www.garavaglia.com

1628 WEBSTER STREET
ALAMEDA, CALIFORNIA

CONVERSION TO
AFFORDABLE HOUSING

REGISTERED PROFESSIONAL ENGINEER
ROSANNA LEPKA
E15977
Exp: 6/30/2025
ELECTRICAL
STATE OF CALIFORNIA

EDesignC Incorporated

ENGINEERING DESIGN COLLABORATIVE
582 MARKET STREET, SUITE 400
SAN FRANCISCO, CA 94104

212 9TH STREET, SUITE 203
OAKLAND, CA 94607

91 GREGORY LANE, SUITE 3
PLEASANT HILL, CA 94523

(415) 963-4303

ELECTRICAL
NOTES

PROJ. NO.	2023-024
SCALE	AS NOTED
DATE	24 JUL 2023
PHASE	CD
DRAWN	CD, CG, HC
CHECKED	RL

NO.	DATE	REVISION
	24 JUL 2023	PERMIT SUBMITTAL

SHEET NO.
E-0.01

ALL DRAWINGS AND WRITTEN MATERIAL APPEARING HEREIN CONSTITUTE ORIGINAL AND UNPUBLISHED WORK OF THE ARCHITECT AND MAY NOT BE DUPLICATED, USED, OR DISCLOSED WITHOUT WRITTEN CONSENT OF THE ARCHITECT. COPYRIGHT 2023 GARAVAGLIA ARCHITECTURE, INC.

GARAVAGLIA ARCHITECTURE INC.
582 MARKET STREET
SUITE 1800
SAN FRANCISCO, CA 94104
T: 415.391.9633
F: 415.391.9647
www.garavaglia.com

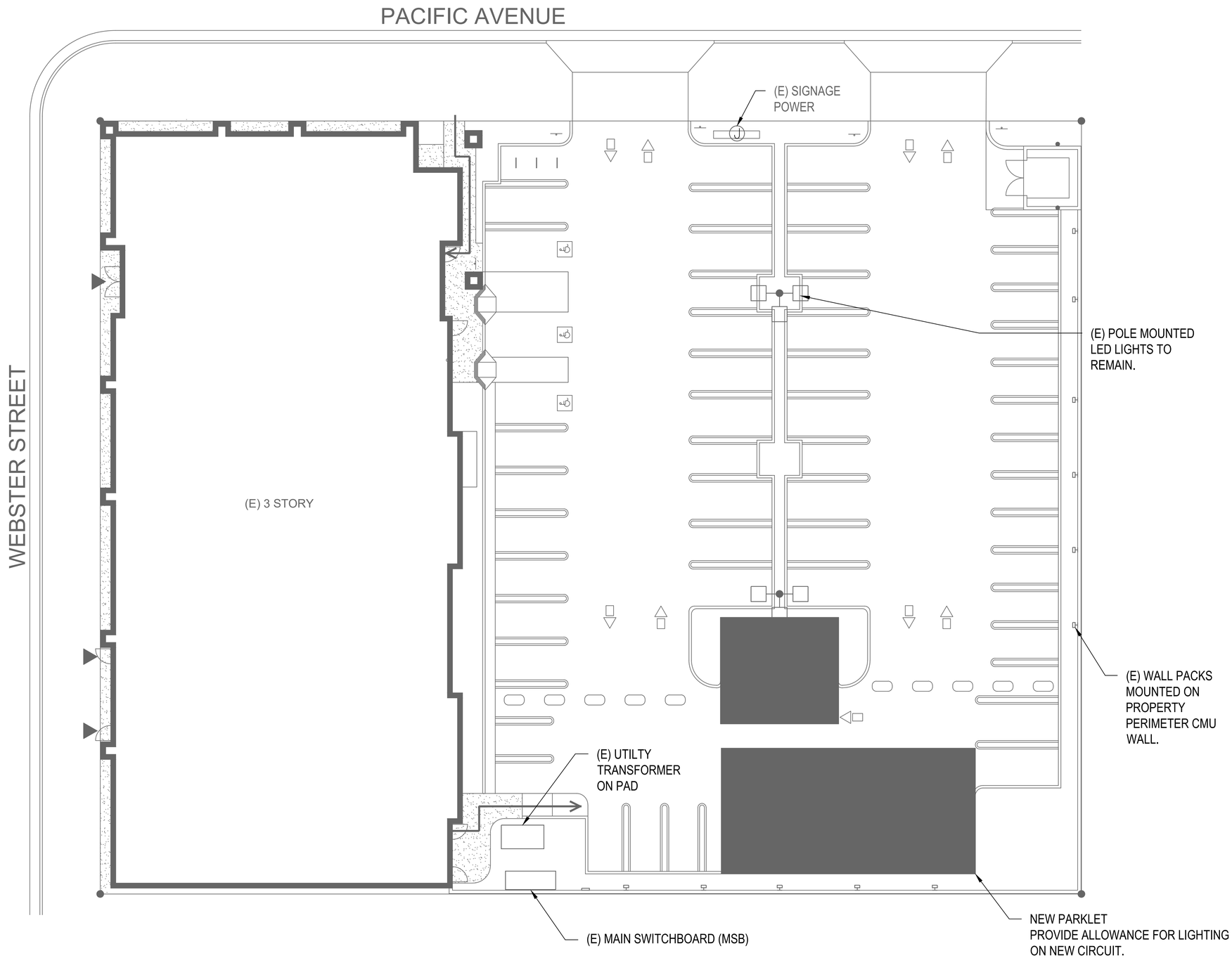

1 SITE ELECTRICAL PLAN

SCALE: 1" = 10'-0"

N

1628 WEBSTER STREET

ALAMEDA, CALIFORNIA

CONVERSION TO AFFORDABLE HOUSING

REGISTERED PROFESSIONAL ENGINEER ROSANNA LEPRA E15977 Exp: 6/30/2025 ELECTRICAL STATE OF CALIFORNIA

EDesignC Incorporated
ENGINEERING DESIGN COLLABORATIVE
582 MARKET STREET, SUITE 400
SAN FRANCISCO, CA 94104
212 9TH STREET, SUITE 203
OAKLAND, CA 94607
91 GREGORY LANE, SUITE 3
PLEASANT HILL, CA 94523
(415) 963-4303

SITE PLAN

ELECTRICAL

PROJ. NO.	2023-024
SCALE	AS NOTED
DATE	24 JUL 2023
PHASE	CD
DRAWN	CD, CG, HC
CHECKED	RL

NO.	DATE	REVISION
	24 JUL 2023	PERMIT SUBMITTAL

SHEET NO.

E-1.01

ALL DRAWINGS AND WRITTEN MATERIAL APPEARING HEREIN CONSTITUTE ORIGINAL AND UNPUBLISHED WORK OF THE ARCHITECT AND MAY NOT BE DUPLICATED, USED, OR DISCLOSED WITHOUT WRITTEN CONSENT OF THE ARCHITECT. COPYRIGHT 2023 GARAVAGLIA ARCHITECTURE, INC.

SHEET NOTES

1. EXISTING CORRIDOR LIGHTS TO REMAIN. PROVIDE NEW LED LAMPS FOR SCREW-IN TYPE FOR LIGHTS IN CORRIDOR.
4. OFFICE OUTLETS SHALL BE DOUBLE DUPLEX WITH ONE DUPLEX TO BE ONE OCCUPANCY SENSOR CONTROL. NEW RECEPTACLES TO USE RE-EXISTING CIRCUITS.
5. DISCONNECT ALL SPA EQUIPMENT POWER BACK TO PANEL 'L'. REVISE PANEL SCHEDULE TO NOTE SPARES FOR ALL REMOVED SPA EQUIPMENT.
6. OFFICE OUTLETS SHALL BE DOUBLE DUPLEX WITH ONE DUPLEX TO BE ONE OCCUPANCY SENSOR CONTROL.

GARAVAGLIA ARCHITECTURE INC.
582 MARKET STREET
SUITE 1800
SAN FRANCISCO, CA 94104
T: 415.391.9633
F: 415.391.9647
www.garavaglia.com

1628 WEBSTER STREET

ALAMEDA, CALIFORNIA

CONVERSION TO AFFORDABLE HOUSING

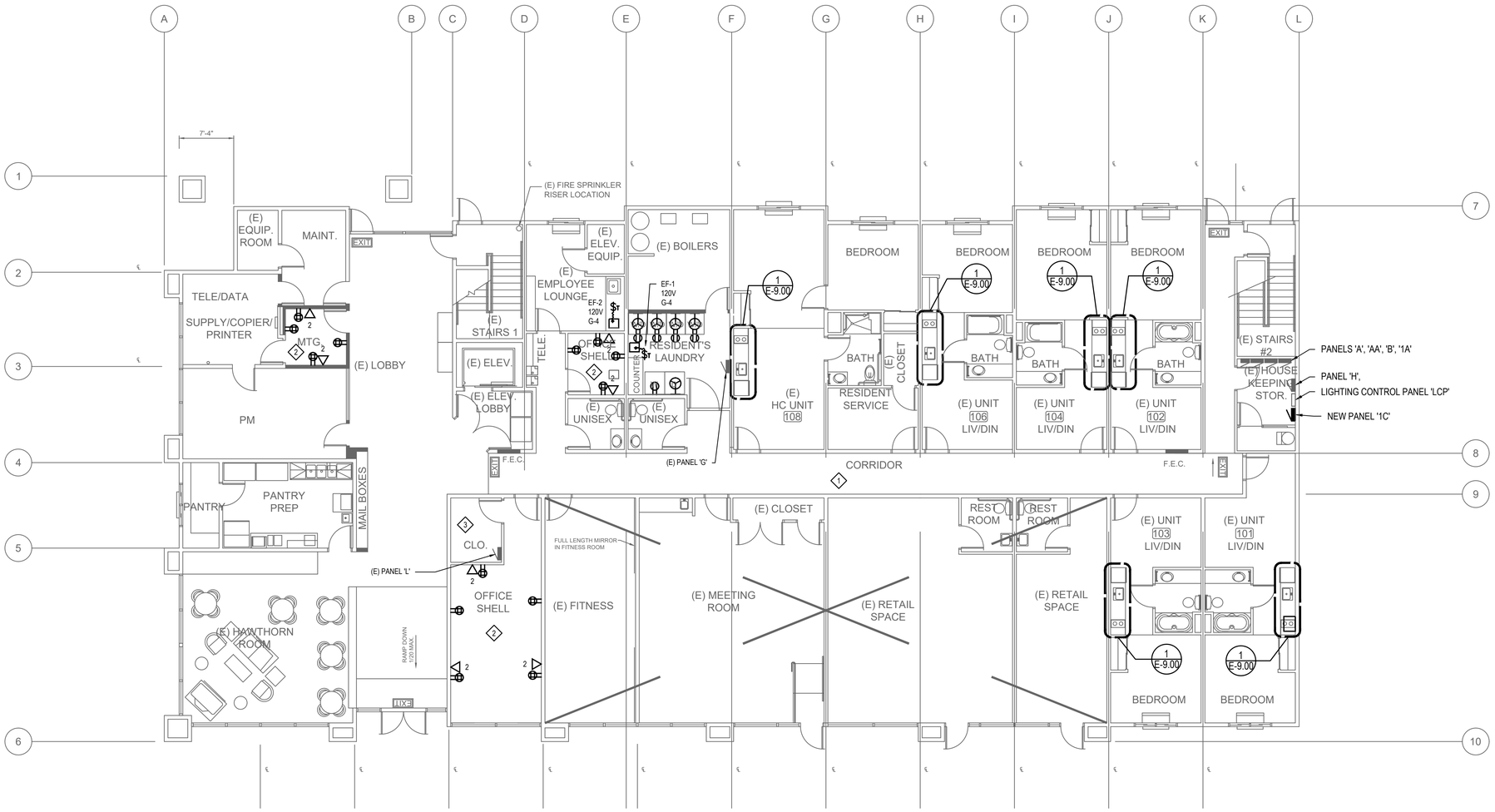

1 MAIN FLOOR ELECTRICAL PLAN PROPOSED

SCALE: 1/8" = 1'-0"

N

REGISTERED PROFESSIONAL ENGINEER ROSANNA LEPRA E15977 Exp: 6/30/2025 ELECTRICAL STATE OF CALIFORNIA

EDesignC Incorporated
ENGINEERING DESIGN COLLABORATIVE
582 MARKET STREET, SUITE 400
SAN FRANCISCO, CA 94104
212 9TH STREET, SUITE 203
OAKLAND, CA 94607
91 GREGORY LANE, SUITE 3
PLEASANT HILL, CA 94523
(415) 963-4303

MAIN FLOOR PLAN

ELECTRICAL

PROPOSED

PROJ. NO.	2023-024
SCALE	AS NOTED
DATE	24 JUL 2023
PHASE	CD
DRAWN	CD, CG, HC
CHECKED	RL

NO.	DATE	REVISION
	24 JUL 2023	PERMIT SUBMITTAL

SHEET NO.

E-2.11

ALL DRAWINGS AND WRITTEN MATERIAL APPEARING HEREIN CONSTITUTE ORIGINAL AND UNPUBLISHED WORK OF THE ARCHITECT AND MAY NOT BE DUPLICATED, USED, OR DISCLOSED WITHOUT WRITTEN CONSENT OF THE ARCHITECT. COPYRIGHT 2023 GARAVAGLIA ARCHITECTURE, INC.

SHEET NOTES

1. EXISTING CORRIDOR LIGHTS TO REMAIN. PROVIDE NEW LED LAMPS FOR SCREW-IN TYPE FOR LIGHTS IN CORRIDOR.
2. REMOVE AND REINSTALL RECEPTACLE, LIGHTS, AND SWITCHES. COORDINATE CHANGES WITH ARCHITECT.

GARAVAGLIA ARCHITECTURE INC.

582 MARKET STREET
SUITE 1800
SAN FRANCISCO, CA 94104
T: 415.391.9633
F: 415.391.9647

www.garavaglia.com

1628 WEBSTER STREET

ALAMEDA, CALIFORNIA

CONVERSION TO
AFFORDABLE HOUSING

REGISTERED PROFESSIONAL ENGINEER
ROSANNA LEPKA
E15977
Exp: 6/30/2025
ELECTRICAL
STATE OF CALIFORNIA

EDesignC Incorporated

ENGINEERING DESIGN COLLABORATIVE
582 MARKET STREET, SUITE 400
SAN FRANCISCO, CA 94104

212 9TH STREET, SUITE 203
OAKLAND, CA 94607

91 GREGORY LANE, SUITE 3
PLEASANT HILL, CA 94523

(415) 963-4303

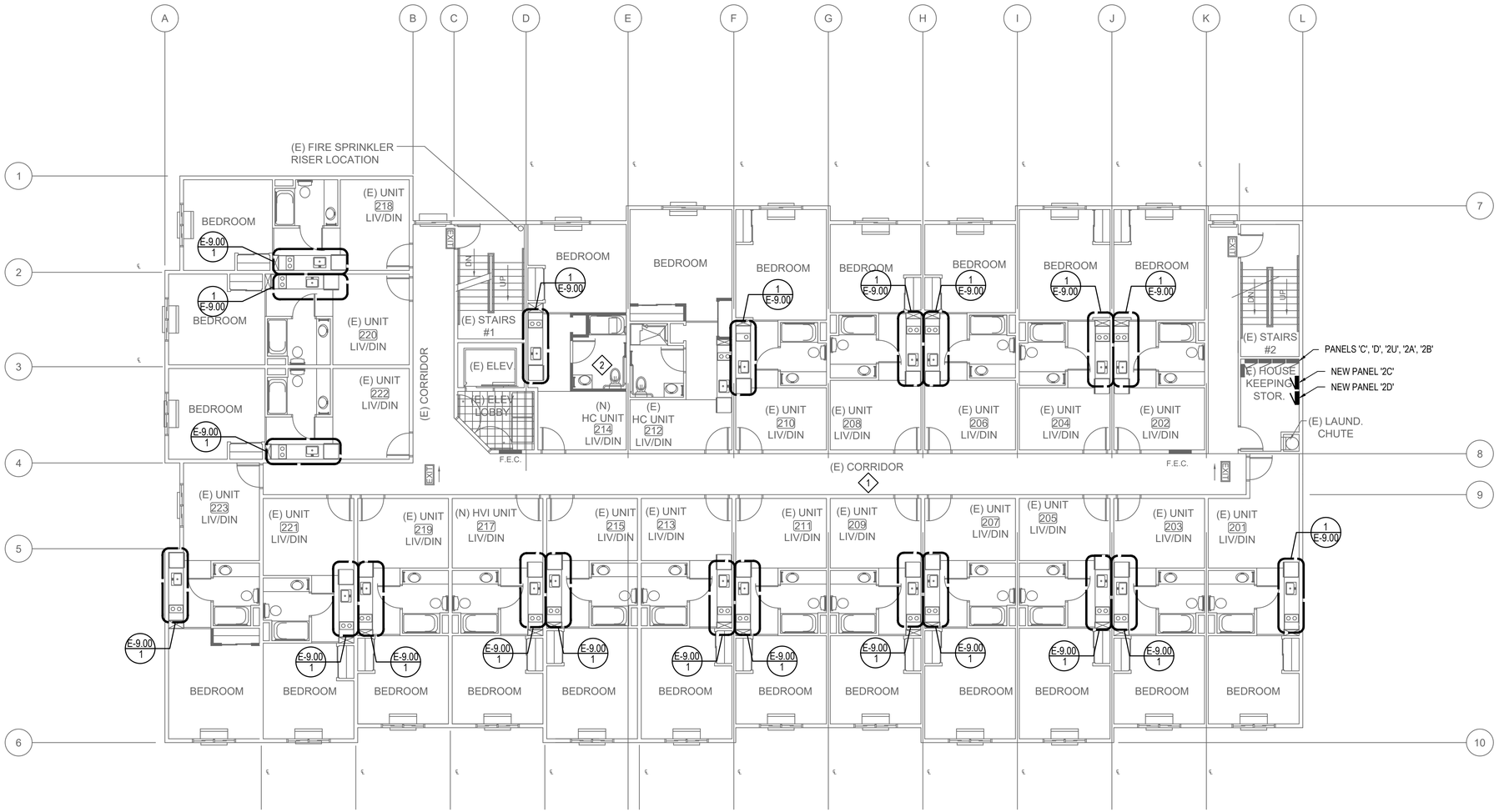

1 SECOND FLOOR ELECTRICAL PLAN PROPOSED

SCALE: 1/8" = 1'-0"

N

SECOND FLOOR PLAN
ELECTRICAL
PROPOSED

PROJ. NO.	2023-024
SCALE	AS NOTED
DATE	24 JUL 2023
PHASE	CD
DRAWN	CD, CG, HC
CHECKED	RL

NO.	DATE	REVISION
	24 JUL 2023	PERMIT SUBMITTAL

SHEET NO.
E-2.12

ALL DRAWINGS AND WRITTEN MATERIAL APPEARING HEREIN CONSTITUTE ORIGINAL AND UNPUBLISHED WORK OF THE ARCHITECT AND MAY NOT BE DUPLICATED, USED, OR DISCLOSED WITHOUT WRITTEN CONSENT OF THE ARCHITECT. COPYRIGHT 2023 GARAVAGLIA ARCHITECTURE, INC.

SHEET NOTES ◇

1. EXISTING CORRIDOR LIGHTS TO REMAIN. PROVIDE NEW LED LAMPS FOR SCREW-IN TYPE FOR LIGHTS IN CORRIDOR.
2. REMOVE AND REINSTALL RECEPTACLE, LIGHTS, AND SWITCHES. COORDINATE CHANGES WITH ARCHITECT.

GARAVAGLIA ARCHITECTURE INC.

582 MARKET STREET
SUITE 1800
SAN FRANCISCO, CA 94104
T: 415.391.9633
F: 415.391.9647

www.garavaglia.com

1628 WEBSTER STREET

ALAMEDA, CALIFORNIA

CONVERSION TO
AFFORDABLE HOUSING

REGISTERED PROFESSIONAL ENGINEER
ROSANNA LEPRA
E15977
Exp: 6/30/2025
ELECTRICAL
STATE OF CALIFORNIA

EDesignC Incorporated

ENGINEERING DESIGN COLLABORATIVE
582 MARKET STREET, SUITE 400
SAN FRANCISCO, CA 94104

212 9TH STREET, SUITE 203
OAKLAND, CA 94607

91 GREGORY LANE, SUITE 3
PLEASANT HILL, CA 94523

(415) 963-4303

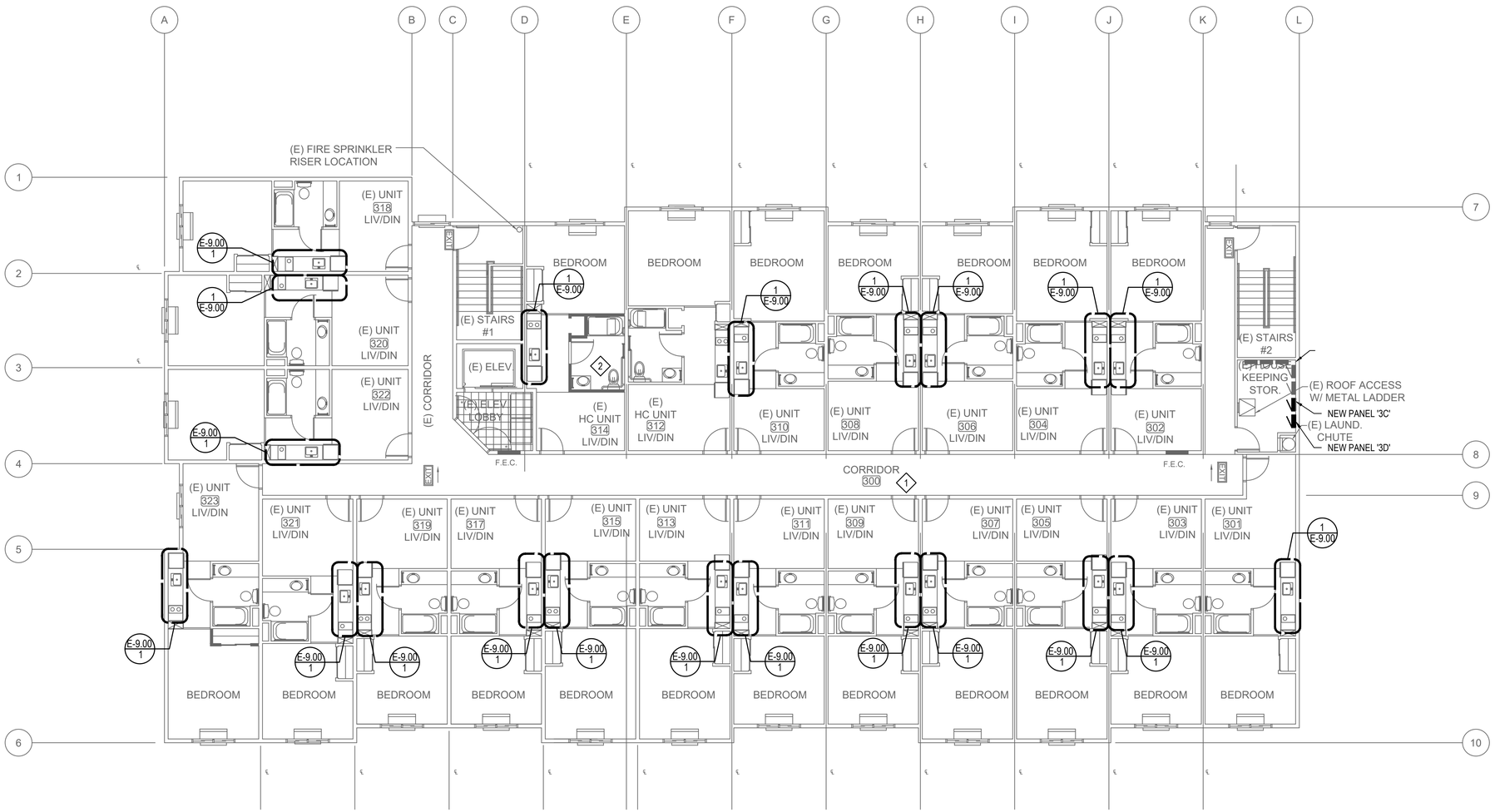

1 THIRD FLOOR ELECTRICAL PLAN PROPOSED

SCALE: 1/8" = 1'-0"

N

THIRD FLOOR PLAN

ELECTRICAL

PROPOSED

PROJ. NO.	2023-024
SCALE	AS NOTED
DATE	24 JUL 2023
PHASE	CD
DRAWN	CD, CG, HC
CHECKED	RL

NO.	DATE	REVISION
	24 JUL 2023	PERMIT SUBMITTAL

SHEET NO.

E-2.13

ALL DRAWINGS AND WRITTEN MATERIAL APPEARING HEREIN CONSTITUTE ORIGINAL AND UNPUBLISHED WORK OF THE ARCHITECT AND MAY NOT BE DUPLICATED, USED, OR DISCLOSED WITHOUT WRITTEN CONSENT OF THE ARCHITECT. COPYRIGHT 2023 GARAVAGLIA ARCHITECTURE, INC.

SHEET NOTES ◇2

1. FURNISH AND INSTALL NEW BREAKERS IN MAIN SWITCHBOARD. COORDINATE NEW FEEDER ROUTING WITH ARCHITECT. INCLUDE NEW TRENCHING FOR NEW FEEDERS.

GARAVAGLIA ARCHITECTURE INC.

582 MARKET STREET
SUITE 1800
SAN FRANCISCO, CA 94104
T: 415.391.9633
F: 415.391.9647

www.garavaglia.com

1628 WEBSTER STREET

ALAMEDA, CALIFORNIA

CONVERSION TO
AFFORDABLE HOUSING

REGISTERED PROFESSIONAL ENGINEER
ROSANNA LERMA
E15977
Exp: 6/30/2025
ELECTRICAL
STATE OF CALIFORNIA

EDesignC Incorporated

ENGINEERING DESIGN COLLABORATIVE
582 MARKET STREET, SUITE 400
SAN FRANCISCO, CA 94104

212 9TH STREET, SUITE 203
OAKLAND, CA 94607

91 GREGORY LANE, SUITE 3
PLEASANT HILL, CA 94523

(415) 963-4303

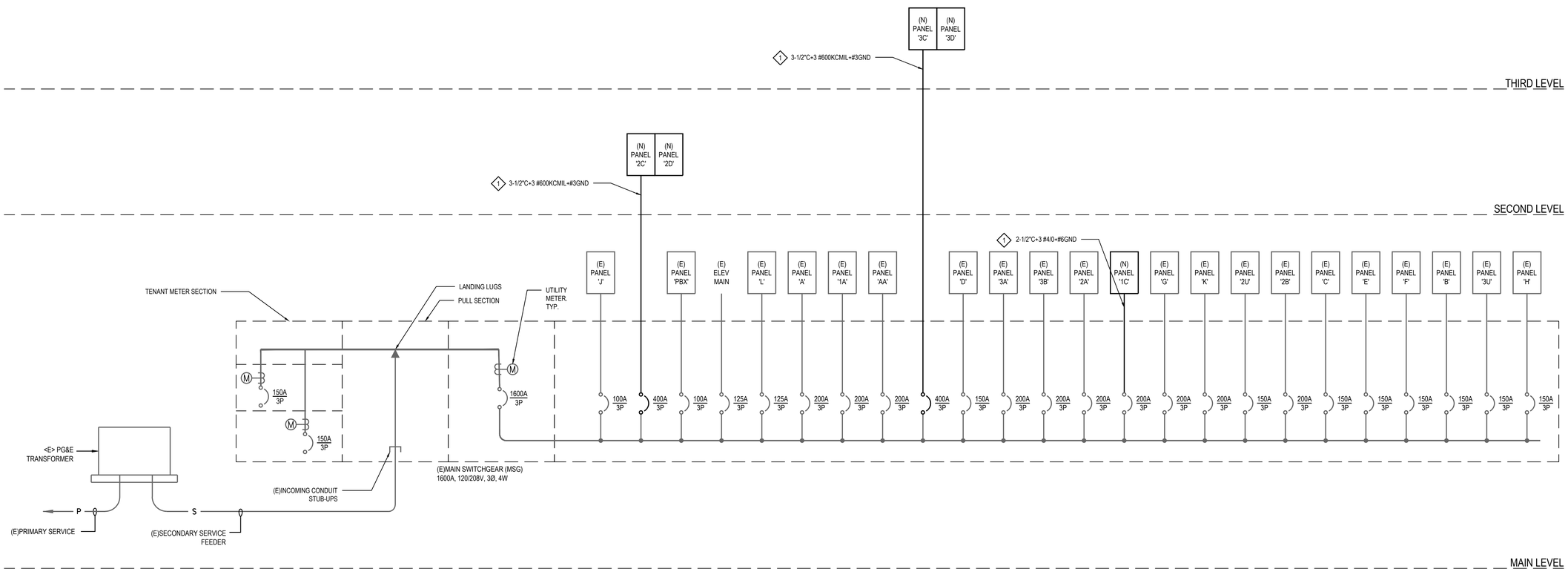

1 SINGLE LINE DIAGRAM

SCALE: NO SCALE

ELECTRICAL

SINGLE LINE DIAGRAM

PROJ. NO.	2023-024
SCALE	AS NOTED
DATE	24 JUL 2023
PHASE	CD
DRAWN	CD, CG, HC
CHECKED	RL

NO.	DATE	REVISION
	24 JUL 2023	PERMIT SUBMITTAL

SHEET NO.

E-3.01

ALL DRAWINGS AND WRITTEN MATERIAL APPEARING HEREIN CONSTITUTE ORIGINAL AND UNPUBLISHED WORK OF THE ARCHITECT AND MAY NOT BE DUPLICATED, USED, OR DISCLOSED WITHOUT WRITTEN CONSENT OF THE ARCHITECT. COPYRIGHT 2023 GARAVAGLIA ARCHITECTURE, INC.

SHEET NOTES ⟐

1. NEW LIGHTING ON EXISTING CIRCUIT. UPDATE PANEL SCHEDULE FOR SPACE CHANGES.

GARAVAGLIA ARCHITECTURE INC.
582 MARKET STREET
SUITE 1800
SAN FRANCISCO, CA 94104
T: 415.391.9633
F: 415.391.9647
www.garavaglia.com

TYPE	MANUFACTURER	MODEL	LAMPING & CCT	MOUNTING	CONTROL	VOLTAGE	LUMENS	MAX VA	NOTES
COMMON AREAS									
1A	WILLIAMS	50-G-S-2-2-L26-8-35-S-S-AF12125-DIM-UNV	INTEGRATED LED 3500K	RECESSED	OCCUPANCY	120	2600	21.3	2X2 LED IN 2X2 CEILING GRID.
1B	WILLIAMS	50-F-S-2-2-L26-8-35-S-S-AF12125-DIM-UNV	INTEGRATED LED 3500K	RECESSED	OCCUPANCY	120	2600	21.3	2X2 LED IN GYP CEILING.

NOTES:

1 - CONTRACTOR SHALL VERIFY EXACT QUANTITY AND LOCATION OF FIXTURES WITH ARCHITECTURAL RCP PLAN PRIOR TO PURCHASING.
2 - ALL FIXTURE LENGTHS, COLOR TEMPERATURES, AND FINISH SHALL BE VERIFIED BY ARCHITECT.
3 - ENGINEER APPROVED EQUAL ALTERNATE MANUFACTURERS ARE ACCEPTABLE.
4 - COORDINATE STRUCTURAL CONNECTIONS WITH STRUCTURAL ENGINEER.

1628 WEBSTER STREET
ALAMEDA, CALIFORNIA

CONVERSION TO
AFFORDABLE HOUSING

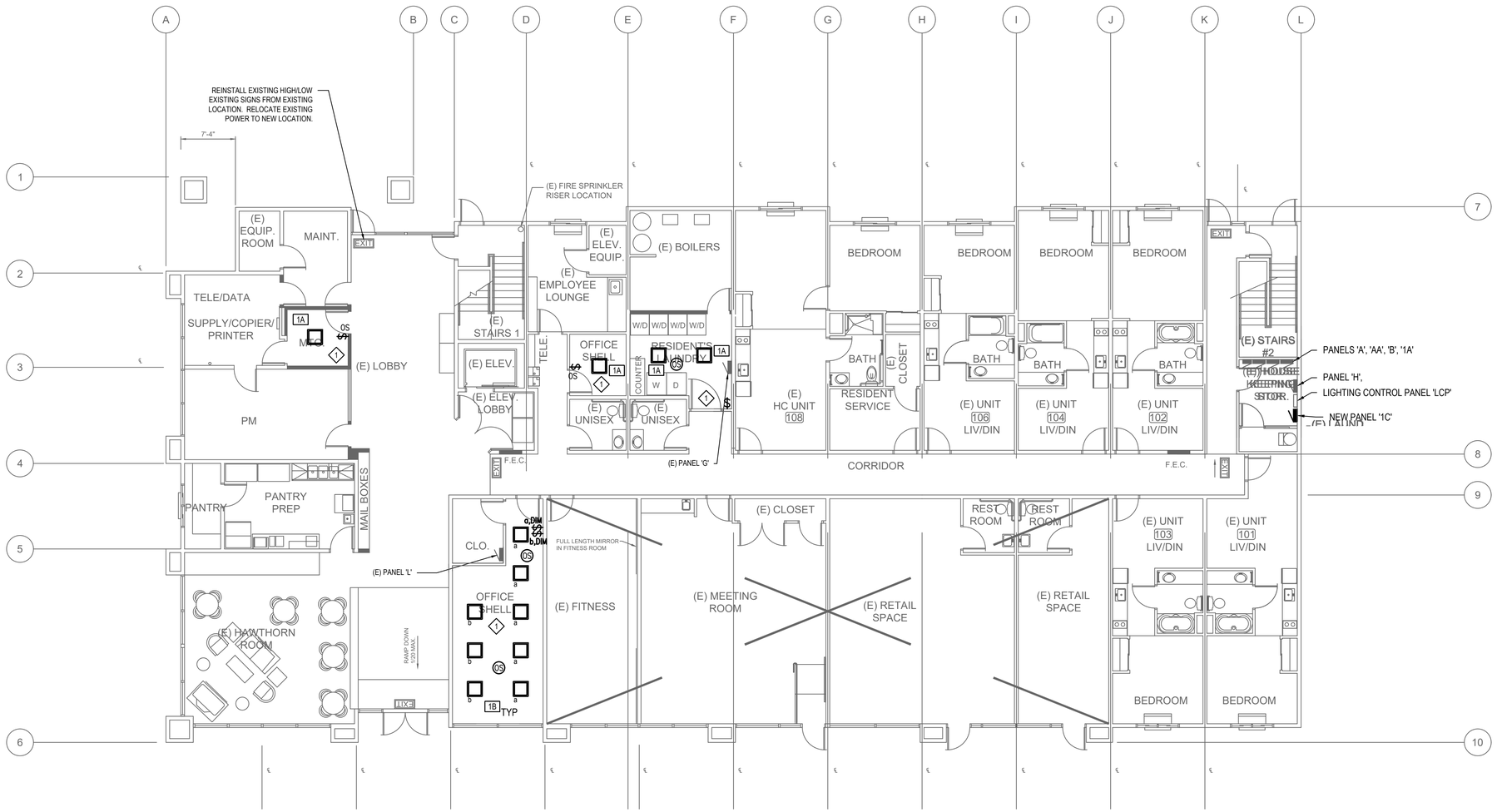

1 MAIN FLOOR LIGHTING PLAN PROPOSED
SCALE: 1/8" = 1'-0"

N

REGISTERED PROFESSIONAL ENGINEER
ROSANNA LEPKA
E15977
Exp: 6/30/2025
ELECTRICAL
STATE OF CALIFORNIA

EDesignC Incorporated
ENGINEERING DESIGN COLLABORATIVE
582 MARKET STREET, SUITE 400
SAN FRANCISCO, CA 94104
212 9TH STREET, SUITE 203
OAKLAND, CA 94607
91 GREGORY LANE, SUITE 3
PLEASANT HILL, CA 94523
(415) 963-4303

MAIN FLOOR PLAN
LIGHTING
PROPOSED

PROJ. NO.	2023-024
SCALE	AS NOTED
DATE	24 JUL 2023
PHASE	CD
DRAWN	CD, CG, HC
CHECKED	RL

NO.	DATE	REVISION
	24 JUL 2023	PERMIT SUBMITTAL

SHEET NO.
E-4.11

ALL DRAWINGS AND WRITTEN MATERIAL APPEARING HEREIN CONSTITUTE ORIGINAL AND UNPUBLISHED WORK OF THE ARCHITECT AND MAY NOT BE DUPLICATED, USED, OR DISCLOSED WITHOUT WRITTEN CONSENT OF THE ARCHITECT. COPYRIGHT 2023 GARAVAGLIA ARCHITECTURE, INC.

PANEL NAME:	(N) PANEL '3C'	**PHASE**	3	**VOLTAGE**	120/208	**MCB**			
LOCATION:	HOUSEKEEPING STOR 334	**WIRE**	4	**AIC**	10,000	**MLO**	250 AMPS		
FED FROM:	MSG								

CKT	NOTES	TYPE	T	P	DESCRIPTION	LOAD		LOAD	DESCRIPTION	T	P	TYPE	NOTES	CKT
1		D	20	2	UNIT 301 COOKTOP	1.15	A		SPACE					2
3		D	---	---	---	1.15	B	1.15	UNIT 302 COOKTOP	20	2	D		4
5		G	20	1	UNIT 301 APPLIANCE CIRCUIT	0.18	C	1.15	---	---	---	D		6
7		D	20	2	UNIT 303 COOKTOP	1.15	A	0.18	UNIT 302 APPLIANCE CIRCUIT	20	1	D		8
9		D	---	---	---	1.15	B	1.15	UNIT 304 COOKTOP	20	2	D		10
11		G	20	1	UNIT 303 APPLIANCE CIRCUIT	0.18	C	1.15	---	---	---	D		12
13		D	20	2	UNIT 303 COOKTOP	1.15	A	0.18	UNIT 304 APPLIANCE CIRCUIT	20	1	D		14
15		D	---	---	---	1.15	B	1.15	UNIT 306 COOKTOP	20	2	D		16
17		G	20	1	UNIT 303 APPLIANCE CIRCUIT	0.18	C	1.15	---	---	---	D		18
19		D	20	2	UNIT 305 COOKTOP	1.15	A	0.18	UNIT 306 APPLIANCE CIRCUIT	20	1	D		20
21		D	---	---	---	1.15	B	1.15	UNIT 308 COOKTOP	20	2	D		22
23		G	20	1	UNIT 305 APPLIANCE CIRCUIT	0.18	C	1.15	---	---	---	D		24
25		D	20	2	UNIT 307 COOKTOP	1.15	A	0.18	UNIT 308 APPLIANCE CIRCUIT	20	1	D		26
27		D	---	---	---	1.15	B	1.15	UNIT 310 COOKTOP	20	2	D		28
29		G	20	1	UNIT 307 APPLIANCE CIRCUIT	0.18	C	1.15	---	---	---	D		30
31		D	20	2	UNIT 309 COOKTOP	1.15	A	0.18	UNIT 310 APPLIANCE CIRCUIT	20	1	D		32
33		D	---	---	---	1.15	B	1.15	UNIT 312 COOKTOP	20	2	D		34
35		G	20	1	UNIT 309 APPLIANCE CIRCUIT	0.18	C	1.15	---	---	---	D		36
37					SPACE		A	0.18	UNIT 312 APPLIANCE CIRCUIT	20	1	D		38
39					SPACE		B		SPACE					40
41					SPACE		C		SPACE					42

PHASE A	7.98	**SUBTOTAL**	**DEMAND CALCULATION**	
PHASE B	13.80	0.00	CONTINUOUS LOAD (C) 125%	0.00
PHASE C	7.98	28.68	DEDICATED LOAD (D) 100%	28.68
		1.08	GENERAL LOAD (G) 100 1ST 10KVA, 50% REST	1.08
PROVIDE DOOR-IN-DOOR COVER AND COPPER BUS.		3.00	LARGEST MOTOR 25%	0.75
		0.00	MOTOR LOAD (M) 100%	0.00
NOTES:			**TOTAL DEMAND**	30.51
			AMPS @ 120/208	84.69

PANEL NAME:	(N) PANEL '3D'	**PHASE**	3	**VOLTAGE**	120/208	**MCB**			
LOCATION:	HOUSEKEEPING STOR 334	**WIRE**	4	**AIC**	VERIFY WITH UTILITY	**MLO**	250 AMPS		
FED FROM:	MSG								

CKT	NOTES	TYPE	T	P	DESCRIPTION	LOAD		LOAD	DESCRIPTION	T	P	TYPE	NOTES	CKT
1		D	20	2	UNIT 311 COOKTOP	1.15	A		SPACE					2
3		D	---	---	---	1.15	B	1.15	UNIT 314 COOKTOP	20	2	D		4
5		G	20	1	UNIT 311 APPLIANCE CIRCUIT	0.18	C	1.15	---	---	---	D		6
7		D	20	2	UNIT 313 COOKTOP	1.15	A	0.18	UNIT 314 APPLIANCE CIRCUIT	20	1	D		8
9		D	---	---	---	1.15	B	1.15	UNIT 316 COOKTOP	20	2	D		10
11		G	20	1	UNIT 313 APPLIANCE CIRCUIT	0.18	C	1.15	---	---	---	D		12
13		D	20	2	UNIT 315 COOKTOP	1.15	A	0.18	UNIT 316 APPLIANCE CIRCUIT	20	1	D		14
15		D	---	---	---	1.15	B	1.15	UNIT 318 COOKTOP	20	2	D		16
17		G	20	1	UNIT 315 APPLIANCE CIRCUIT	0.18	C	1.15	---	---	---	D		18
19		D	20	2	UNIT 317 COOKTOP	1.15	A	0.18	UNIT 318 APPLIANCE CIRCUIT	20	1	D		20
21		D	---	---	---	1.15	B	1.15	UNIT 320 COOKTOP	20	2	D		22
23		G	20	1	UNIT 317 APPLIANCE CIRCUIT	0.18	C	1.15	---	---	---	D		24
25		D	20	2	UNIT 319 COOKTOP	1.15	A	0.18	UNIT 320 APPLIANCE CIRCUIT	20	1	D		26
27		D	---	---	---	1.15	B	1.15	UNIT 322 COOKTOP	20	2	D		28
29		G	20	1	UNIT 319 APPLIANCE CIRCUIT	0.18	C	1.15	---	---	---	D		30
31		D	20	2	UNIT 321 COOKTOP	1.15	A	0.18	UNIT 322 APPLIANCE CIRCUIT	20	1	D		32
33		D	---	---	---	1.15	B	1.15	UNIT 323 COOKTOP	20	2	D		34
35		G	20	1	UNIT 321 APPLIANCE CIRCUIT	0.18	C	1.15	---	---	---	D		36
37					SPACE		A	0.18	UNIT 323 APPLIANCE CIRCUIT	20	1	D		38
39					SPACE		B		SPACE					40
41					SPACE		C		SPACE					42

PHASE A	7.98	**SUBTOTAL**	**DEMAND CALCULATION**	
PHASE B	13.80	0.00	CONTINUOUS LOAD (C) 125%	0.00
PHASE C	7.98	28.68	DEDICATED LOAD (D) 100%	28.68
		1.08	GENERAL LOAD (G) 100 1ST 10KVA, 50% REST	1.08
PROVIDE DOOR-IN-DOOR COVER AND COPPER BUS.		3.00	LARGEST MOTOR 25%	0.00
		0.00	MOTOR LOAD (M) 100%	0.00
NOTES:			**TOTAL DEMAND**	29.76
			AMPS @ 120/208	82.61

PANEL NAME:	(N) PANEL '2C'	**PHASE**	3	**VOLTAGE**	120/208	**MCB**			
LOCATION:	HOUSEKEEPING STOR 234	**WIRE**	4	**AIC**	10,000	**MLO**	250 AMPS		
FED FROM:	MSG								

CKT	NOTES	TYPE	T	P	DESCRIPTION	LOAD		LOAD	DESCRIPTION	T	P	TYPE	NOTES	CKT
1		D	20	2	UNIT 201 COOKTOP	1.15	A		SPACE					2
3		D	---	---	---	1.15	B	1.15	UNIT 202 COOKTOP	20	2	D		4
5		G	20	1	UNIT 201 APPLIANCE CIRCUIT	0.18	C	1.15	---	---	---	D		6
7		D	20	2	UNIT 203 COOKTOP	1.15	A	0.18	UNIT 202 APPLIANCE CIRCUIT	20	1	D		8
9		D	---	---	---	1.15	B	1.15	UNIT 204 COOKTOP	20	2	D		10
11		G	20	1	UNIT 203 APPLIANCE CIRCUIT	0.18	C	1.15	---	---	---	D		12
13		D	20	2	UNIT 203 COOKTOP	1.15	A	0.18	UNIT 204 APPLIANCE CIRCUIT	20	1	D		14
15		D	---	---	---	1.15	B	1.15	UNIT 206 COOKTOP	20	2	D		16
17		G	20	1	UNIT 203 APPLIANCE CIRCUIT	0.18	C	1.15	---	---	---	D		18
19		D	20	2	UNIT 205 COOKTOP	1.15	A	0.18	UNIT 206 APPLIANCE CIRCUIT	20	1	D		20
21		D	---	---	---	1.15	B	1.15	UNIT 208 COOKTOP	20	2	D		22
23		G	20	1	UNIT 205 APPLIANCE CIRCUIT	0.18	C	1.15	---	---	---	D		24
25		D	20	2	UNIT 207 COOKTOP	1.15	A	0.18	UNIT 208 APPLIANCE CIRCUIT	20	1	D		26
27		D	---	---	---	1.15	B	1.15	UNIT 210 COOKTOP	20	2	D		28
29		G	20	1	UNIT 207 APPLIANCE CIRCUIT	0.18	C	1.15	---	---	---	D		30
31		D	20	2	UNIT 209 COOKTOP	1.15	A	0.18	UNIT 210 APPLIANCE CIRCUIT	20	1	D		32
33		D	---	---	---	1.15	B	1.15	UNIT 212 COOKTOP	20	2	D		34
35		G	20	1	UNIT 209 APPLIANCE CIRCUIT	0.18	C	1.15	---	---	---	D		36
37					SPACE		A	0.18	UNIT 212 APPLIANCE CIRCUIT	20	1	D		38
39					SPACE		B		SPACE					40
41					SPACE		C		SPACE					42

PHASE A	7.98	**SUBTOTAL**	**DEMAND CALCULATION**	
PHASE B	13.80	0.00	CONTINUOUS LOAD (C) 125%	0.00
PHASE C	7.98	28.68	DEDICATED LOAD (D) 100%	28.68
		1.08	GENERAL LOAD (G) 100 1ST 10KVA, 50% REST	1.08
PROVIDE DOOR-IN-DOOR COVER AND COPPER BUS.		3.00	LARGEST MOTOR 25%	0.75
		0.00	MOTOR LOAD (M) 100%	0.00
NOTES:			**TOTAL DEMAND**	30.51
			AMPS @ 120/208	84.69

PANEL NAME:	(N) PANEL '2D'	**PHASE**	3	**VOLTAGE**	120/208	**MCB**			
LOCATION:	HOUSEKEEPING STOR 234	**WIRE**	4	**AIC**	VERIFY WITH UTILITY	**MLO**	250 AMPS		
FED FROM:	MSG								

CKT	NOTES	TYPE	T	P	DESCRIPTION	LOAD		LOAD	DESCRIPTION	T	P	TYPE	NOTES	CKT
1		D	20	2	UNIT 211 COOKTOP	1.15	A		SPACE					2
3		D	---	---	---	1.15	B	1.15	UNIT 214 COOKTOP	20	2	D		4
5		G	20	1	UNIT 211 APPLIANCE CIRCUIT	0.18	C	1.15	---	---	---	D		6
7		D	20	2	UNIT 213 COOKTOP	1.15	A	0.18	UNIT 214 APPLIANCE CIRCUIT	20	1	D		8
9		D	---	---	---	1.15	B	1.15	UNIT 216 COOKTOP	20	2	D		10
11		G	20	1	UNIT 213 APPLIANCE CIRCUIT	0.18	C	1.15	---	---	---	D		12
13		D	20	2	UNIT 215 COOKTOP	1.15	A	0.18	UNIT 216 APPLIANCE CIRCUIT	20	1	D		14
15		D	---	---	---	1.15	B	1.15	UNIT 218 COOKTOP	20	2	D		16
17		G	20	1	UNIT 215 APPLIANCE CIRCUIT	0.18	C	1.15	---	---	---	D		18
19		D	20	2	UNIT 217 COOKTOP	1.15	A	0.18	UNIT 218 APPLIANCE CIRCUIT	20	1	D		20
21		D	---	---	---	1.15	B	1.15	UNIT 220 COOKTOP	20	2	D		22
23		G	20	1	UNIT 217 APPLIANCE CIRCUIT	0.18	C	1.15	---	---	---	D		24
25		D	20	2	UNIT 219 COOKTOP	1.15	A	0.18	UNIT 220 APPLIANCE CIRCUIT	20	1	D		26
27		D	---	---	---	1.15	B	1.15	UNIT 222 COOKTOP	20	2	D		28
29		G	20	1	UNIT 219 APPLIANCE CIRCUIT	0.18	C	1.15	---	---	---	D		30
31		D	20	2	UNIT 221 COOKTOP	1.15	A	0.18	UNIT 222 APPLIANCE CIRCUIT	20	1	D		32
33		D	---	---	---	1.15	B	1.15	UNIT 223 COOKTOP	20	2	D		34
35		G	20	1	UNIT 221 APPLIANCE CIRCUIT	0.18	C	1.15	---	---	---	D		36
37					SPACE		A	0.18	UNIT 223 APPLIANCE CIRCUIT	20	1	D		38
39					SPACE		B		SPACE					40
41					SPACE		C		SPACE					42

PHASE A	7.98	**SUBTOTAL**	**DEMAND CALCULATION**	
PHASE B	13.80	0.00	CONTINUOUS LOAD (C) 125%	0.00
PHASE C	7.98	28.68	DEDICATED LOAD (D) 100%	28.68
		1.08	GENERAL LOAD (G) 100 1ST 10KVA, 50% REST	1.08
PROVIDE DOOR-IN-DOOR COVER AND COPPER BUS.		3.00	LARGEST MOTOR 25%	0.00
		0.00	MOTOR LOAD (M) 100%	0.00
NOTES:			**TOTAL DEMAND**	29.76
			AMPS @ 120/208	82.61

PANEL NAME:	(E) PANEL 'G'	**PHASE**	3	**VOLTAGE**	120/208	**MCB**			
LOCATION:	LAUNDRY 121	**WIRE**	4	**AIC**	10,000	**MLO**	250 AMPS		
FED FROM:	MSG								

CKT	NOTES	TYPE	T	P	DESCRIPTION	LOAD		LOAD	DESCRIPTION	T	P	TYPE	NOTES	CKT
1	2,3	M	30	2	ELECTRIC DRYER	1.2	A	1.2	ELECTRIC DRYER	30	2	M	2,3	2
3	2,3	M	---	---	---	1.2	B	1.2	---	---	---	M	2,3	4
5	2,3	M	30	2	ELECTRIC DRYER	1.2	C	0.2	EF-1, EF-2	20	1	M	2	6
7	2,3	M	---	---	---	1.2	A	0.3	LAUNDRY/BRK/RR LIGHTS	20	1	C	1	8
9	2,3	M	30	2	ELECTRIC DRYER	1.2	B	0.5	EF-4 (LAUNDRY RM)	20	1	M	1	10
11	2,3	M	---	---	---	1.2	C	0.54	MEETING ROOM GFCI	20	1	G	1	12
13	1	G	20	1	LAUNDRY ROOM RECEPTS.	1	A	0.54	MEETING ROOM RECEPTS.	20	1	G	1	14
15	1	G	20	1	MAINTENANCE RECEPTS	0.5	B	0.54	MEETING ROOM RECEPTS.	20	1	G	1	16
17	2	M	20	1	OFFICE 115 RECEPTACLES	0.7	C	1.2	ELECTRIC DRYER	30	2	M	2,3	18
19	2,3	M	20	1	WASHER	0.7	A	1.2	---	---	---	M	2,3	20
21	2,3	M	20	1	WASHER	0.7	B	0.5	WATER HEATER STRIKE	20	1	G	1	22
23	1	D	20	1	VENDING	0.25	C	0.5	WATER HEATER STRIKE	20	1	G	1	24
25	1	D	20	1	VENDING	0.25	A		SPACE					26
27	1	G	20	1	PUBLIC RESTROOM GFCI	0.18	B	0.5	MEETING ROOM LIGHTS	20	1	C	1	28
29	1	C	20	1	N. STAIR LIGHTS & EXHAUST FAN	0.3	C	0.2	RECIRCULATION PUMPS	20	1	M	1	30
31	1	C	20	1	S. STAIR LIGHTS & EXHAUST FAN	0.3	A	0.2	RECIRCULATION PUMPS	20	1	M	1	32
33	1	G	20	1	FITNESS RECEPTS	0.54	B		SPACE					34
35	1	M	20	1	TREAD MILL	0.3	C	0.2	WATER HEATER POWER VENT	20	1	D	1	36
37	1	M	20	1	TREAD MILL	0.3	A	0.2	WATER HEATER POWER VENT	20	1	D	1	38
39	1	C	20	1	FITNESS LIGHTS	0.2	B	0.7	WASHER	20	1	M	2,3	40
41	2,3	M	20	1	WASHER	0.7	C	0.7	WASHER	20	1	M	2,3	42

PHASE A	8.59	**SUBTOTAL**	**DEMAND CALCULATION**	
PHASE B	8.46	1.60	CONTINUOUS LOAD (C) 125%	2.00
PHASE C	8.19	0.90	DEDICATED LOAD (D) 100%	0.90
		4.84	GENERAL LOAD (G) 100 1ST 10KVA, 50% REST	4.84
		3.00	LARGEST MOTOR 25%	0.75
		17.90	MOTOR LOAD (M) 100%	22.38
			TOTAL DEMAND	30.87
			AMPS @ 120/208	85.67

NOTES:
1 - EXISTING CIRCUIT WITH ESTIMATE LOAD
2 - NEW CIRCUIT WITH NEW BREAKER
3 - GFCI BREAKER

PANEL NAME:	(N) PANEL '1C'	**PHASE**	3	**VOLTAGE**	120/208	**MCB**			
LOCATION:	HOUSEKEEPING STOR 134	**WIRE**	4	**AIC**	10,000	**MLO**	250 AMPS		
FED FROM:	MSG								

CKT	NOTES	TYPE	T	P	DESCRIPTION	LOAD		LOAD	DESCRIPTION	T	P	TYPE	NOTES	CKT
1		D	20	2	UNIT 101 COOKTOP	1.15	A		SPACE					2
3		D	---	---	---	1.15	B	1.15	UNIT 102 COOKTOP	20	2	D		4
5					SPACE		C	1.15	---	---	---	D		6
7		D	20	2	UNIT 103 COOKTOP	1.15	A				SPACE			8
9		D	---	---	---	1.15	B	1.15	UNIT 104 COOKTOP	20	2	D		10
11					SPACE		C	1.15	---	---	---	D		12
13		D	20	2	UNIT 103 COOKTOP	1.15	A				SPACE			14
15		D	---	---	---	1.15	B	1.15	UNIT 106 COOKTOP	20	2	D		16
17					SPACE		C	1.15	---	---	---	D		18
19		D	20	2	RESIDENT SERVICES COOKTOP	1.15	A				SPACE			20
21		D	---	---	---	1.15	B		SPACE					22
23					SPACE		C		SPACE					24
25					SPACE		A		SPACE					26
27					SPACE		B		SPACE					28
29					SPACE		C		SPACE					30
31					SPACE		A		SPACE					32
33					SPACE		B		SPACE					34
35					SPACE		C		SPACE					36
37					SPACE		A		SPACE					38
39					SPACE		B		SPACE					40
41					SPACE		C		SPACE					42

PHASE A	4.60	**SUBTOTAL**	**DEMAND CALCULATION**	
PHASE B	8.05	0.00	CONTINUOUS LOAD (C) 125%	0.00
PHASE C	3.45	16.10	DEDICATED LOAD (D) 100%	16.10
		0.00	GENERAL LOAD (G) 100 1ST 10KVA, 50% REST	0.00
PROVIDE DOOR-IN-DOOR COVER AND COPPER BUS.		3.00	LARGEST MOTOR 25%	0.75
		0.00	MOTOR LOAD (M) 100%	0.00
NOTES:			**TOTAL DEMAND**	16.85
			AMPS @ 120/208	46.77

2 NEW AND CHANGED PANEL SCHEDULES

SCALE: NO SCALE

SHEET NOTES 2

1. ROUTE NEW CIRCUITS FROM CORRIDOR CEILING. NO EXPOSED CONDUIT.
2. FURNISH AND INSTALL STOVE STOP TIMER. COORDINATE LOCATION WITH ARCHITECT.

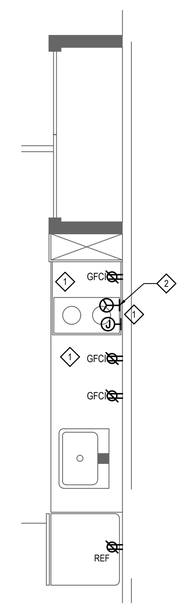

1 ENLARGED UNIT KITCHETTE

SCALE: 1/2" = 1'-0"

GARAVAGLIA ARCHITECTURE INC.
582 MARKET STREET
SUITE 1800
SAN FRANCISCO, CA 94104
T: 415.391.9633
F: 415.391.9647
www.garavaglia.com

REGISTERED PROFESSIONAL ENGINEER ROSANNA LEPKA E15977 Exp: 6/30/2025 ELECTRICAL STATE OF CALIFORNIA

EDesignC Incorporated
ENGINEERING DESIGN COLLABORATIVE
582 MARKET STREET, SUITE 400
SAN FRANCISCO, CA 94104
212 9TH STREET, SUITE 203
OAKLAND, CA 94607
91 GREGORY LANE, SUITE 3
PLEASANT HILL, CA 94523
(415) 963-4303

1628 WEBSTER STREET
ALAMEDA, CALIFORNIA

CONVERSION TO AFFORDABLE HOUSING

ELECTRICAL
SINGLE LINE DIAGRAM

PROJ. NO.	2023-024
SCALE	AS NOTED
DATE	24 JUL 2023
PHASE	CD
DRAWN	CD, CG, HC
CHECKED	RL

NO.	DATE	REVISION
	24 JUL 2023	PERMIT SUBMITTAL

SHEET NO.
E-9.00

ALL DRAWINGS AND WRITTEN MATERIAL APPEARING HEREIN CONSTITUTE ORIGINAL AND UNPUBLISHED WORK OF THE ARCHITECT AND MAY NOT BE DUPLICATED, USED, OR DISCLOSED WITHOUT WRITTEN CONSENT OF THE ARCHITECT. COPYRIGHT 2023 GARAVAGLIA ARCHITECTURE, INC.

GARAVAGLIA ARCHITECTURE INC.
582 MARKET STREET
SUITE 1800
SAN FRANCISCO, CA 94104
T: 415.391.9633
F: 415.391.9647
www.garavaglia.com

1628 WEBSTER STREET
ALAMEDA, CALIFORNIA

CONVERSION TO
AFFORDABLE HOUSING

STATE OF CALIFORNIA
Indoor Lighting
CALIFORNIA ENERGY COMMISSION

CERTIFICATE OF COMPLIANCE			**NRCC-LTI-E**
This document is used to demonstrate compliance with requirements in 110.9, 110.12(c), 130.0, 130.1, 140.6 and 141.0(b)2 for indoor lighting scopes using the prescriptive path for nonresidential and hotel/motel occupancies. It is also used to document compliance with requirements in 160.5, 170.2(e) and 180.2(b)4 for indoor lighting scopes using the prescriptive path for multifamily occupancies. Multifamily includes dormitory and senior living facilities.			
Project Name:	Poppy Studios	**Report Page:**	**(Page 1 of 7)**
Project Address:	1628 Webster Street	**Date Prepared:**	7/26/2023

A. GENERAL INFORMATION

01	Project Location (city)	Alameda	04	Total Conditioned Floor Area (ft^2)	590
02	Climate Zone	3	05	Total Unconditioned Floor Area (ft^2)	0
03	Occupancy Types Within Project (select all that apply):		06	# of Stories (Habitable Above Grade)	1

● Office ● All Other Occupancies

B. PROJECT SCOPE

This table includes any lighting systems that are within the scope of the permit application and are demonstrating compliance using the prescriptive path outlined in 140.6 / 170.2(e) or 141.0(b)2 / 180.2(b)4 for alterations.

Scope of Work	Conditioned Spaces		Unconditioned Spaces	
01	02	03	04	05
My Project Consists of (check all that apply):	Calculation Method	Area (ft^2)	Calculation Method	Area (ft^2)
☐ New Lighting System				
☐ New Lighting System - Parking Garage				
☒ Altered Lighting System	Area Category Method	590	Area Category Method	0
Total Area of Work (ft^2)	590		0	

STATE OF CALIFORNIA
Indoor Lighting
CALIFORNIA ENERGY COMMISSION

CERTIFICATE OF COMPLIANCE			**NRCC-LTI-E**
Project Name:	Poppy Studios	**Report Page:**	**(Page 2 of 7)**
Project Address:	1628 Webster Street	**Date Prepared:**	7/26/2023

C. COMPLIANCE RESULTS

If any cell on this table says "DOES NOT COMPLY" or "COMPLIES with Exceptional Conditions" refer to Table D. for guidance.

Lighting in conditioned and unconditioned spaces must not be combined for compliance per 140.6(b)1 / 170.2(e)	Allowed Lighting Power per 140.6(b) / 170.2(e) (Watts)						Adjusted Lighting Power per 140.6(a) / 170.2(e) (Watts)				Compliance Results
	01	02	03	04		05	06	07		08	09
	Complete Building 140.6(c)1	Area Category 140.6(a)2 / 170.2(e)4	Area Category Additional 140.6(c)2G / 170.2(e)4Av (+)	Tailored 140.6(c)3 / 170.2(e)4B (+)	=	**Total Allowed** (Watts)	≥ Total Designed (Watts)	Adjustments PAF Lighting Control Credits 140.6(a)2 / 170.2(e)1B (-)	=	**Total Adjusted** (Watts) *Includes Adjustments	**05 must be >= 08 140.6 / 170.2(e)**
	(See Table I)	(See Table I)	(See Table J)	(See Table K)			(See Table F)	(See Table P)			
Conditioned		351.2	0		=	351	≥ 256	0	=	256	COMPLIES
Unconditioned					=		≥		=		
Controls Compliance (See Table H for Details)											COMPLIES
Rated Power Reduction Compliance (See Table Q for Details)											

D. EXCEPTIONAL CONDITIONS

This table is auto-filled with uneditable comments because of selections made or data entered in tables throughout the form.

E. ADDITIONAL REMARKS

This table includes remarks made by the permit applicant to the Authority Having Jurisdiction.

STATE OF CALIFORNIA
Indoor Lighting
CALIFORNIA ENERGY COMMISSION

CERTIFICATE OF COMPLIANCE			**NRCC-LTI-E**
Project Name:	Poppy Studios	**Report Page:**	**(Page 3 of 7)**
Project Address:	1628 Webster Street	**Date Prepared:**	7/26/2023

F. INDOOR LIGHTING FIXTURE SCHEDULE

This table includes all planned permanent and portable lighting other than dwelling unit/ hotel/ motel room lighting. Multifamily dwelling unit and hotel/motel room lighting is documented in Table T. If using Table T to document lighting in multifamily common use areas providing shared provisions for living, eating, cooking or sanitation, those luminaires are not included here.

Designed Wattage: Conditioned Spaces

01	02	03	04	05	06	07	08	09	10	
Name or Item Tag	Complete Luminaire Description	Modular (Track) Fixture	Small Aperture & Color Change[1]	Watts per luminaire[2]	How is Wattage determined	Total Number of Luminaires	Excluded per 140.6(a)3 / 170.2(e)2C	Design Watts	Field Inspector	
									Pass	Fail
1A	2X2 LED	No	NA	21.3	Mfr. Spec	4	No	85.2	☐	☐
1B	2X2 LED	No	NA	21.3	Mfr. Spec	8	No	170.4	☐	☐
Total Designed Watts: CONDITIONED SPACES								256		

[1]FOOTNOTE: Design Watts for small aperture and color changing luminaires which qualify per 140.6(a)4B / 170.2(e)2D is adjusted to be 75% /80% of their rated wattage. Table F automatically makes this adjustment, the permit applicant should enter full rated wattage in column 05.

[2]Authority Having Jurisdiction may ask for Luminaire cut sheets to confirm wattage used for compliance per 130.0(c) / 160.5(b). Wattage used must be the maximum rated for the luminaire, not the lamp.

G. MODULAR LIGHTING SYSTEMS

This section does not apply to this project.

H. INDOOR LIGHTING CONTROLS (Not including PAFs)

This table includes lighting controls for conditioned and unconditioned spaces.

Building Level Controls

01	02	03	
Mandatory Demand Response 110.12(c)	Shut-off controls 130.1(c) / 160.5(b)4C	Field Inspector	
		Pass	Fail
NA < 4,000W subject to multilevel	See Area/Space Level Controls	☐	☐

STATE OF CALIFORNIA
Indoor Lighting
CALIFORNIA ENERGY COMMISSION

CERTIFICATE OF COMPLIANCE			**NRCC-LTI-E**
Project Name:	Poppy Studios	**Report Page:**	**(Page 4 of 7)**
Project Address:	1628 Webster Street	**Date Prepared:**	7/26/2023

H. INDOOR LIGHTING CONTROLS (Not including PAFs)

Area Level Controls

04	05	06	07	08	09	10	11	12	
Area Description	Complete Building or Area Category Primary Function Area	Manual Area Controls 130.1(a) / 160.5(b)4A	Multi-Level Controls 130.1(b) / 160.5(b)4B	Shut-Off Controls 130.1(c) // 160.5(b)4C	Primary/Skylit Daylighting 130.1(d) / 160.5(b)4D	Secondary Daylighting 130.1(d) / 160.5(b)4D	Interlocked Systems 140.6(a)1/ 170.2(e)2A	Field Inspector	
								Pass	Fail
Offices	Office (<=250 square feet)	Readily Accessible	NA: General Ltg <= 0.5W/SF	Occupancy Sensor	NA: General Ltg < 120W	NA: General Ltg < 120W	No	☐	☐
Laundry	Laundry	Readily Accessible	NA: General Ltg <= 0.5W/SF	Occupancy Sensor	NA: Rm < 24sf Glazing	NA: Rm < 24sf Glazing	No	☐	☐
Offices	Office (>250 square feet)	Readily Accessible	NA: General Ltg <= 0.5W/SF	Occupancy Sensor	NA: General Ltg < 120W	NA: General Ltg < 120W	No	☐	☐
					13				
					Plan Sheet Showing Daylit Zones:				
					E4.11				

I. LIGHTING POWER ALLOWANCE: COMPLETE BUILDING OR AREA CATEGORY METHODS

Each area complying using the Complete Building or Area Category Methods per 140.6(b) are included in this table. Column 06 indicates if additional lighting power allowances per 140.6(c) or adjustments per 140.6(a) are being used .

Conditioned Spaces

01	02	03	04	05	06	
Area Description	Complete Building or Area Category Primary Function Area	Allowed Density (W/ft^2)	Area (ft^2)	Allowed Wattage (Watts)	Additional Allowance / Adjustment	
					Area Category	PAF
Offices	Office (<=250 square feet)	0.65	429	278.8	No	No
Laundry	Laundry	0.45	161	72.4	No	No
		TOTALS:	590	351.2	See Tables J, or P for detail	

REGISTERED PROFESSIONAL ENGINEER ROSANNA LEPRA E15977 Exp: 6/30/2025 ELECTRICAL STATE OF CALIFORNIA

EDesignC Incorporated
ENGINEERING DESIGN COLLABORATIVE
582 MARKET STREET, SUITE 400
SAN FRANCISCO, CA 94104
212 9TH STREET, SUITE 203
OAKLAND, CA 94607
91 GREGORY LANE, SUITE 3
PLEASANT HILL, CA 94523
(415) 963-4303

TITLE 24
FORMS

PROJ. NO. 2023-024
SCALE AS NOTED
DATE 24 JUL 2023
PHASE CD
DRAWN CD, CG, HC
CHECKED RL

NO.	DATE	REVISION
	24 JUL 2023	PERMIT SUBMITTAL

SHEET NO.
E-T24.1

ALL DRAWINGS AND WRITTEN MATERIAL APPEARING HEREIN CONSTITUTE ORIGINAL AND UNPUBLISHED WORK OF THE ARCHITECT AND MAY NOT BE DUPLICATED, USED, OR DISCLOSED WITHOUT WRITTEN CONSENT OF THE ARCHITECT. COPYRIGHT 2023 GARAVAGLIA ARCHITECTURE, INC.

GARAVAGLIA ARCHITECTURE INC.
582 MARKET STREET
SUITE 1800
SAN FRANCISCO, CA 94104
T: 415.391.9633
F: 415.391.9647

www.garavaglia.com

1628 WEBSTER STREET
ALAMEDA, CALIFORNIA

CONVERSION TO
AFFORDABLE HOUSING

STATE OF CALIFORNIA
Indoor Lighting
CALIFORNIA ENERGY COMMISSION

CERTIFICATE OF COMPLIANCE			**NRCC-LTI-E**
Project Name:	Poppy Studios	**Report Page:**	**(Page 5 of 7)**
Project Address:	1628 Webster Street	**Date Prepared:**	7/26/2023

J. ADDITIONAL ALLOWANCE: AREA CATGORY METHOD QUALIFYING LIGHTING SYSTEM
This section does not apply to this project.

K. TAILORED METHOD GENERAL LIGHTING POWER ALLOWANCE
This section does not apply to this project.

L. ADDITIONAL LIGHTING ALLOWANCE: TAILORED WALL DISPLAY
This section does not apply to this project.

M. ADDITIONAL LIGHTING ALLOWANCE: TAILORED FLOOR AND TASK LIGHTING
This section does not apply to this project.

N. ADDITIONAL LIGHTING ALLOWANCE: TAILORED DECORATIVE /SPECIAL EFFECTS
This section does not apply to this project.

O. ADDITIONAL LIGHTING ALLOWANCE: TAILORED VERY VALUABLE MERCHANDISE
This section does not apply to this project.

P. POWER ADJUSTMENT: LIGHTING CONTROL CREDIT (POWER ADJUSTMENT FACTOR (PAF))
This section does not apply to this project.

Q. RATED POWER REDUCTION COMPLIANCE FOR ONE-FOR-ONE ALTERATIONS
This section does not apply to this project.

Registration Number:
Generated Date/Time:
Documentation Software: EnergyPro
CA Building Energy Efficiency Standards - 2022 Nonresidential Compliance
Report Version: 2022.0.000
Schema Version: rev 20220101
Compliance ID: EnergyPro-7790-0723-0017
Report Generated: 2023-07-26 04:38:35

STATE OF CALIFORNIA
Indoor Lighting
CALIFORNIA ENERGY COMMISSION

CERTIFICATE OF COMPLIANCE			**NRCC-LTI-E**
Project Name:	Poppy Studios	**Report Page:**	**(Page 6 of 7)**
Project Address:	1628 Webster Street	**Date Prepared:**	7/26/2023

R. 80% LIGHTING POWER FOR ALL ALTERATIONS - CONTROLS EXCEPTIONS
This section does not apply to this project.

S. DAYLIGHT DESIGN POWER ADJUSTMENT FACTOR (PAF)
This section does not apply to this project.

T. DWELLING UNIT LIGHTING
This section does not apply to this project.

U. DECLARATION OF REQUIRED CERTIFICATES OF INSTALLATION

Form/Title
NRCI-LTI-E - Must be submitted for all buildings

V. DECLARATION OF REQUIRED CERTIFICATES OF ACCEPTANCE
There are no NRCA forms required for this project.

Registration Number:
Generated Date/Time:
Documentation Software: EnergyPro
CA Building Energy Efficiency Standards - 2022 Nonresidential Compliance
Report Version: 2022.0.000
Schema Version: rev 20220101
Compliance ID: EnergyPro-7790-0723-0017
Report Generated: 2023-07-26 04:38:35

STATE OF CALIFORNIA
Indoor Lighting
CALIFORNIA ENERGY COMMISSION

CERTIFICATE OF COMPLIANCE			**NRCC-LTI-E**
Project Name:	Poppy Studios	**Report Page:**	**(Page 7 of 7)**
Project Address:	1628 Webster Street	**Date Prepared:**	7/26/2023

DOCUMENTATION AUTHOR'S DECLARATION STATEMENT

I certify that this Certificate of Compliance documentation is accurate and complete.

Documentation Author Name: Henry Chan	Documentation Author Signature:
Company: EDesignC, Inc.	Signature Date: 2023-07-26
Address: 582 Market Street	CEA/ HERS Certification Identification (if applicable):
City/State/Zip: San Francisco CA 94104	Phone: (415) 985-2898

RESPONSIBLE PERSON'S DECLARATION STATEMENT

I certify the following under penalty of perjury, under the laws of the State of California:

1. The information provided on this Certificate of Compliance is true and correct.
2. I am eligible under Division 3 of the Business and Professions Code to accept responsibility for the building design or system design identified on this Certificate of Compliance (responsible designer)
3. The energy features and performance specifications, materials, components, and manufactured devices for the building design or system design identified on this Certificate of Compliance conform to the requirements of Title 24, Part 1 and Part 6 of the California Code of Regulations.
4. The building design features or system design features identified on this Certificate of Compliance are consistent with the information provided on other applicable compliance documents, worksheets, calculations, plans and specifications submitted to the enforcement agency for approval with this building permit application.
5. I will ensure that a completed signed copy of this Certificate of Compliance shall be made available with the building permit(s) issued for the building, and made available to the enforcement agency for all applicable inspections. I understand that a completed signed copy of this Certificate of Compliance is required to be included with the documentation the builder provides to the building owner at occupancy.

Responsible Designer Name: Rosanna Lerma	Responsible Designer Signature:
Company: EDesignC, Inc.	Date Signed: 2023-07-26
Address: 582 Market St. Suite 400	License: E15977
City/State/Zip: San Francisco CA 94104	Phone: (415) 985-2898

Registration Number:
Generated Date/Time:
Documentation Software: EnergyPro
CA Building Energy Efficiency Standards - 2022 Nonresidential Compliance
Report Version: 2022.0.000
Schema Version: rev 20220101
Compliance ID: EnergyPro-7790-0723-0017
Report Generated: 2023-07-26 04:38:35

REGISTERED PROFESSIONAL ENGINEER
ROSANNA LERMA
E15977
Exp: 6/30/2025
ELECTRICAL
STATE OF CALIFORNIA

EDesignC Incorporated
ENGINEERING DESIGN COLLABORATIVE
582 MARKET STREET, SUITE 400
SAN FRANCISCO, CA 94104

212 9TH STREET, SUITE 203
OAKLAND, CA 94607

91 GREGORY LANE, SUITE 3
PLEASANT HILL, CA 94523

(415) 963-4303

TITLE 24
FORMS

PROJ. NO. 2023-024
SCALE AS NOTED
DATE 24 JUL 2023
PHASE CD
DRAWN CD, CG, HC
CHECKED RL

NO.	DATE	REVISION
	24 JUL 2023	PERMIT SUBMITTAL

SHEET NO.
E-T24.2

ALL DRAWINGS AND WRITTEN MATERIAL APPEARING HEREIN CONSTITUTE ORIGINAL AND UNPUBLISHED WORK OF THE ARCHITECT AND MAY NOT BE DUPLICATED, USED, OR DISCLOSED WITHOUT WRITTEN CONSENT OF THE ARCHITECT. COPYRIGHT 2023 GARAVAGLIA ARCHITECTURE, INC.